AN ULTRA-LOW COST APPROACH
TO
ADAPTIVE EQUIPMENT FOR THE HANDICAPPED

by DAVID F. SCUDDER

and THOMAS J. LIPKA

A publication of Binghamton (NY) Chapter 96 of the
American Institute of Industrial Engineers

March 1986

copies: David Scudder
General Electric Co.
77 WREN ST
Johnson City, NY
13790
(607) 770-3767
+ $2.80 postage

DEDICATED

to all those who gave so generously of their time in the projects that led to the publishing of this book. They made the dream come true.....

Al Kresock	Bill Peterson	Al Rozman
Pat Sissenstein	Merida Padro	Luis Valenzuela
Steve Brownell	Cheryl Justafin	Tom Jenkins
John Mytlak	Rosemary Zeccola	Marilyn Weiner
Patty Blazey	Bob Koplick	Joe Mehal
Bob Squire	Oren Molsted	Milt Wolters
Ellen Hotchkiss	Jo Ann Lutgens	Kate McGuire
Bob Freeborn	Gil Raymond	Pat Wallbridge
Steve Hissong	Warren Scofield	Don Rumrill
Jon Lyford	Eric Baumlin	Jim Walsh
Phil Glaeser	Colette Glaeser	Art Keeley
Judi Beckstrand	Frank Linehan	Kevin Jones
Mike Cahill	Debbie Cahill	Theresa Proferio
Bill Armading	Greg Robinson	Don Kunkle
Bonnie Snyder	John Torres	Ed Coleman

.....and to the kids

ACKNOWLEDGEMENT

vol-un-teer -- a person who performs or gives his services of his own free will.

As individuals, each of us can contribute a great deal by voluntary means. The accomplishments of Chapter 96 of the American Institute of Industrial Engineers, and all other professional organizations and individuals associated with the programs to assist handicapped persons through the marriage of technology and therapy, serve as testimony to the magnitude of what good can come when volunteers unite in a group effort.

General Electric Company businesses of the Binghamton, N.Y., area are proud that many of those involved in the efforts outlined in this book are our employees, and greatly pleased that such voluntarism exists in the community we call home.

This book was printed by:

General Electric Company
Binghamton, NY

TABLE OF CONTENTS

RELEASE. 1

INTRODUCTION 2

CHAPTER I - AN ADAPTIVE EQUIPMENT PROJECT IS BORN 6

CHAPTER II - STARTING YOUR OWN PROJECT 13

CHAPTER III - YOUR FIRST SESSION 19

CHAPTER IV - LINING UP THE RESOURCES 22

CHAPTER V - SUGGESTED DESIGN STANDARDS 27

CHAPTER VI - CONTROLLING THE COSTS 32

CHAPTER VII - A BIT OF ELECTRICAL THEORY 35

CHAPTER VIII - MEET THE COMPONENTS 44

CHAPTER IX - AN INTRODUCTION TO WIRING & SOLDERING . . . 53

CHAPTER X - MAKING YOUR OWN PRINTED CIRCUIT BOARDS . . . 59

CHAPTER XI - COMMUNICATING WITH OTHER GROUPS 69

APPENDIX A - A GLOSSARY OF TERMS 71

APPENDIX B - PROFESSIONAL SOCIETIES. 75

APPENDIX C - SOURCES OF COMPONENTS 77

APPENDIX D - TOOLS AND MATERIALS 78

APPENDIX E - THE SPOT TIE 80

APPENDIX F - EXISTING DESIGNS. 82

RELEASE

The authors and Chapter 96 of the American Institute of Industrial Engineers release and relinquish all rights to this book and the projects contained herein to the public domain, provided only that no commercial or profit making use is made thereof.

It is the intent of the authors and Chapter 96 that the widest distribution be made of the ideas, concepts and designs contained herein, and that any person or organization assisting the handicapped and disabled, other than for profit, should be able to make full and unencumbered use therof.

This book is for the edification of its readers. While reasonable care has been exercised with respect to accuracy, the authors and A.I.I.E. Chapter 96 assume no responsibility for errors, omissions or suitability of its contents for any application, nor do they assume liability for any damages resulting from the use of this book.

INTRODUCTION

For those who care for the handicapped a spate of nearly insoluable problems exist in acquiring electrical and electronic equipment which will allow the handicapped to communicate, control or otherwise interface with the world the rest of us find so normal and tailored to our needs. To turn on a television set or an appliance we simply get up, go to the device, reach out and turn a switch. The homes and workplaces in which we spend our lives, and the devices we use for work and enjoyment are designed for our convenience. To the disabled, these commonplace actions may present insuprable problems, with the equipment involved out of reach and beyond their physical ability to operate. Specialized equipment or adapters, especially designed to allow the handicapped to exercise some mininum level of control over their lives and their environments are too often completely unavailable in the marketplace. Large corperations with the depth of engineering expertise available to make such equipment are understandably reluctant to enter a limited market such as adaptive or specialized equipment, opting instead for the much more lucrative and less risky common consumer markets. When a company does apply itself to specialty equipment, the equipment is the victim of short production runs and the economies of scale and is, therefore, too often prohibitively expensive. This is usually due to the problems that the industry faces with overhead, product liability insurance and their responsibility to provide stockholders with a reasonable profit, and not the result of consciously fleecing a captive market. Some abuses have taken place, but the authors believe these to be the exception rather than the rule.

Another aspect of the commercially available equipment market is the unfortunate fact that much of that equipment must be tailored to a specific disabled person, and unless the design is extremely clever, some will be purchased and never be usable by the consumer.

For the last two years, members and friends of Binghamton (NY) Chapter 96 of the American Institute of Industrial Engineers have been running a pilot program to solve the problems outlined above by applying Industrial Engineering principles, disciplines and expertise to them. Working with a major center for the care of the handicapped and developmentally disabled, and with an informal group of parents of disabled children, Chapter 96's efforts were judged by the Institute of Industrial Engineers as having the best Community Service Project in the United States for 1984. The key to the enormous success of the program is the cooperative venture between those who care for the disabled and the engineering community. Discussed in some detail in Chapter

I, in general, the professional society provides problem solution, design engineering and documentation, training and supervision, and the group working with the handicapped provides a simple shop, the purchased materials and the assembly labor. In this way, the group will eventually become somewhat self-sufficient and may not require the level of assistance it did initially.

After nearly two years of effort, one of the authors was invited to address a seminar of members of the American Occupational Therapists Association from the Central New York region, and review our program, accomplishments and future plans. It was the in the discussion that followed the address that these health professionals convinced the author that there was a great need for similar programs around the country, and little or no information about how to start one. That seminar and the discussion which followed triggered a decision by Chapter 96, AIIE, to attempt to produce a "starter kit" for others to use to seed similar effortselsewhere. We have apparently broken new ground and in publishing this book, we are attempting to sow seeds of hope for a better life for the handicapped.

This book is, therefore, an attempt by Binghamton Chapter 96 to provide all the information necessary for any organization or individual to set up a similar project to produce specialized equipment for enriching the lives of the handicapped. The procedures covered in this book will be applicable to the individual parent of a handicapped child, a group of such parents a special education center, a total care facility, or even a hospital, nursing home or outpatient therapy and evaluation center.

While one major thrust of this book will be to spark cooperative ventures between groups who care for the handicapped and professional societies that may be willing to provide the necessary engineering talent, enough data will be provided so that those with no technical education or background can set up a project, start building simple equipment and eventually progress to more complex equipment even if no local professional society is available.

Very basic electrical circuit theory is presented in Chapter VII, the word "very" being emphasized. This simple level of theory will give enough insight into how electricity flows out of a source, is controlled by a switch, does its work and returns to the source. The information is geared to the initiate and is so simplified in nature that it should not cause apprehension in anyone. The level of the theory presented should enable the average housewife to disassemble a battery-operated toy, transistor radio or portable tape recorder, figure out how the "on-off" function works, and adapt it to work off a remote switch operable by her disabled child. While thorough grounding in electrical/electronic theory is, of course, beyond the scope of this book, there will be enough to get started, and will suggest easy ways to get as much additional theory as is necessary, in

the unlikely event a professional society is not available to take on the electrical design function. Again, the value of the professional society to the success of the project is patently obvious and the desirability of getting one involved cannot be overstated. There will be more than enough to do without having to take on the learning of highly complex engineering disciplines.

The skills needed to actually build the equipment are not as complex as the layman might expect. The home handyman will have almost all he or she needs already, and if someone hasn't worked much around the house, chapters on the use, care and safety considerations of common hand tools and of good shop practices are included. This aspect of the project will pay dividends in everyday life and are not specific to building electrical equipment for the handicapped. One chapter will detail how to line up the assistance of several specialty skills and resources, such as woodworking and machine shop skills. If the reader lives far up in the hills, away from any sizable town where these are available, there will be enough material included to allow him to function without these resources. In producing equipment to aid the disabled, it is all well and good to have the devices nicely finished and aestheticly pleasing, but the essential quality is function. The book will give the capability to arrive at the required function with or without the professional craftsmen. Such people tend to be clever and resourceful, however, and bring to a project a wealth of expertise. If there is any way to enlist their help, it is certainly worth the effort.

Soldering is an area which makes many shy away, and of course it is an essential part of building any electrical equipment. Soldering has acquired a reputation, particularly around the high technology industries, computer manufacture, communications and the aerospace industry as being somewhere between diamond cutting and brain surgery in complexity. In critical systems, such as flight control systems for high performance jet aircraft, an area in which the authors have long years of experience, many lives and millions of dollars worth of equipment and indeed the fate of nations may ultimately rest upon the quality of a single solder joint. It is little wonder that these industries spend large sums and many hours training, certifying, inspecting and auditing their soldering operations. And yet, soldering is essentially a simple skill. Absent all of the special industrial requirements for "high reliability" soldering, soldering is a skill which can be learned in a few minutes and will produce electrical connections of a quality and reliability quite suitable for our needs. The authors have both taught high quality soldering in an industrial setting and have been considered as "experts" in their respective positions. There is no question that the reader can learn to solder adequately from the material presented. After all, more than 90% of the industrial people involved in high quality soldering are recruited from the ranks of everyday people.

After a modest initial outlay for any tools and consumable materials needed, the costs of the project will be mainly the

cost of the materials and components for each job. Our experience has shown that the costs involved in raising a disabled child or caring for a disabled adult are so enormous that little is left over as discretionary funds. The control and minimization of cost is a way of life with most professionals in the engineering field, and a major portion of this book will be devoted to cost control. Imagination and ingenuity (don't be afraid to suggest things, engineers don't have a copyright on ingenuity) play a large role in cost management and will be exploited to the fullest. Specialty equipment produced by your project team may well average as low as 10% of the cost of comparable commercially available equipment.

The major point of the whole endeavor is that, given the low cost, "do-it-yourself" approach, the handicapped will be able to have more and more varied support equipment, and that equipment tailored to their own abilities.

CHAPTER I

AN ADAPTIVE EQUIPMENT PROJECT IS BORN

BROOME DEVELOPMENTAL CENTER

In the autumn of 1983, Chapter 96 of the American Institute of Industrial Engineers was contacted by the Broome Developmental Center and asked for assistance in producing simple electrical switches for the handicapped. While the actual manufacture of any kind of equipment was considered to be in violation of the charter of the Chapter, so as to preclude the professional society from competing in the marketplace with any private industry, we offered to visit the BDC facility, investigate their needs and see if there was an area in which we could provide consultation or industrial engineering services.

The initial meeting was held at BDCs' superb facility, set in the rolling hills of southern New York. It was immediately apparent to us that the BDC Occupational Therapy staff were professionals to the core in their chosen fields, but had no knowlege whatever about electrical/ electronics equipment. The first discussions revealed that a language barrier existed between our two disciplines. They had great difficulty in describing their wants and needs in terms that we could understand, and when they began to get through to us, we were unable to propose solutions in terms that they could understand. Near the end of this first, less than optimum meeting, BDC produced a virtual Rosetta Stone in the form of Linda Burkharts' magnificent book, "Battery Operated Toys and Educational Devices for Severely Handicapped Children". Burkharts' book deals so comprehensively with simple home adaptations, Chapter 96 recommends it most highly for anyone considering doing any form of adaptive equipment. We arranged to borrow this book, study it and return again.

With Burkhart leading the way, the next couple of sessions were consumed by learning each others' technical jargon. The problem being thus defined, the Industrial Engineers realized that while unique solutions to switches operable by the handcapped might call for some innovative techniques, from an engineering design viewpoint, there was nothing intrinsically difficult about the task at hand. Building such specialty switches, and modifying toys and other equipment to operate with such switches was, technically, simplicity itself. Another problem area which the Occupational Therapy people identified to us was that of incompatibility of equipment which they had

previously purchased. Switches obtained from one manufacturer would not plug into, and thus operate, the equipment of another manufacturer. Here again, the solution was quite simple from an engineering standpoint.

Constrained by the previously mentioned Charter restriction against manufacturing equipment ourselves, Chapter 96 formed a plan in which it would perform design functions for switches and other equipment, including circuit development and documentation, drawings, bills of material and any testing required. The chapter also would arrange to train the BDC Occupational Therapy staff in wiring, soldering and electrical theory to a sufficient degree to allow them to fabricate the equipment themselves. We would attend all construction sessions and provide such supervision as was required, with the goal being to eventually make the BDC self-sufficient in this area. The plan called for the actual construction labor to be furnished by Broome Developmental Center. They also would provide a shop in which to work, and would, of course, bear the cost of materials.

AIIE formally offered this plan to the OT staff of BDC and acceptance was immediate. Thus began a happy and valuable learning experience for both organizations that is continuing to this day.

The first step was the formulation of a training course in the various skills that they would need. Very basic training courses in electrical circuit theory, just enough to understand how battery-operated toys and switches work, was prepared with demonstration devices and visual aids. In constructing the course syllabus, the initial steps toward some equipment design standards emerged. The most valuable was deciding upon a standard plug and jack set to connect clients' switches to the equipment it was desired that they should control. This standard allowed complete flexibility in interconnecting switches and equipment. Another course was put together to teach the basics of wiring and soldering techniques. The industrial experience of Chapter 96 in these fields was brought to bear in both courses. Both courses were presented to those staff people at BDC who had volunteered to do the work, and followed up by hands-on workshops and demonstrations. The performance by the Occupational Therapists, in a field totally foreign to them, was superb. Expanded versions of these courses appear in Chapters VII and IX.

The first construction sessions began in the early spring of 1984. A number of specially designed switches were fabricated (many copied or adopted from Burkhart) and several toys, recorders and so forth adapted to take the switches. These first simple projects were successful in themselves and allowed the two organizations to get to know one another, develop confidence in each others capabilities and acquire a feel for how the project as a whole was going to develop. Two important concepts arose from this initial phase. First, Broome Developmental Center began to realize that what they had been purchasing for large sums could be built quickly for considerably less money. BDC

being tightly budgetted, common in the health care industry, this economy aspect gave the project instant visibility and credibility as a valuable adjunct to their work. Secondly, AIIE Chapter 96 became convinced that specialty equipment beyond that which BDC had conceived was easily within the grasp and capability of what had developed into a Therapy/Engineering Team.

The engineering section allowed BDCs' desires to drive the effort for awhile, being cautious that plunging too quickly into complex projects might be counter-productive. The thrust of the first few months, then, was to devise the simplest and quickest solutions to specific problems put forth by the BDC OT staff.

A typical example involved a one-evening project. The staff defined a problem with a wheelchair-bound client who greatly enjoyed listening to a personal tape recorder. The client also had an unwanted trait, a desire to thrust the head continuously backward, that the Therapists were trying to select out of him. A headrest switch was designed which would allow the recorder to run until the head was forced back into the undesirable position was designed and built from materials available in the shop. A spreadable paper-fastener, a bit of metal, two pieces of plexiglas and a bit of foam rubber made up the whole affair. The quick, one-evening turn-around, combined with the zero-cost aspect of using materials within reach rather than purchased components impressed the staff that good, solid engineering solutions to problems did not need to be either costly or protracted. This type of "instant" solution, while certainly not achievable with complex problems, nevertheless became a hallmark of our operations.

Several small electronic projects were devised in response to the stated needs of the Therapists. An AC Interface Circuit was constructed as one of a set of interfaces to be plugged in between the clients' specialty switches and the device to be controlled. The AC Interface allowed the client to control ordinary 110 volt (house current) appliances without any danger of coming into contact with the higher voltage. A relay, operated from a 9 volt transistor radio battery was operated by the client switch, the relay subsequently operating the higher voltage appliance.

A DC Inverter Circuit, used to invert the function of any client switch from a "Normally-on" to a "Normally-off" mode, was constructed using a relay to perform the inversion.

An "And/Or Gate" Circuit was built to satisfy a therapy requirement. This circuit, again inserted between two client switches and the device to be controlled, allowed the Therapists to select (by throwing a switch of their own) to alter the circuit so that either of two functions could be selected. The circuit would thus be configured so that the device being controlled would require that switch A AND B be closed in order to operate it, or that either switch A OR B would do it. This allowed them to set up the "reward" or positive reinforcement for

a variety of situations.

In all of these small projects, our initial design standard of using the same plug/jack combination to foster great flexibility was proven to be a valuable asset. Safety standards for equipment were also developed and incorperated in the designs.

This phase ended with our first project of medium complexity. The Occupational Therapists presented a problem they were having with training the severely handicapped in the use of electric wheelchair controls. Such wheelchairs are normally controlled by the use of a joystick controller. Push the stick forward, the chair goes forward; push the stick to the left, the chair turns left, etc. Their (developmentally) disabled clients might require long hours of working the controls just to learn how to overcome their motor control difficulties. In a powered wheelchair, they would jeopardize themselves, the equipment and those who care for them until such time as a minimum level of control competence was achieved. A simulator which would allow a "dummy" joystick to be used, with appropriate simulation of motion would allow the client to work at his or her own pace, and learn control competence in a safe, non-dynamic environment, free from the anxiety associated with instant motion. Chapter 96 designed a simulator in which a joystick, constructed on-site, would illuminate a four-arrow lighted display showing the direction of the simulated motion. For realism, an audio oscillator/amplifier produced the simulated sound of an electric wheelchair whenever the joystick was activated.

The project has since progressed through a series of other designs of essentially simple nature. A time-delay interface will allow the clients' switch to turn on a device and leave it on for a selectable length of time from a few seconds to fifteen minutes before the device is turned off. This circuit forces the client to periodically reactivate his switch to obtain the desired reinforcement and thus has positive therapy value.

A similar interface, a Bi-Stable Relay, in which a clients' first activation of his switch turns a device on and allows it to remain on until a second activation turns it off was also designed during this period.

The first complex job tackled by the AIIE/BDC team was the construction of a Communications Board for non-verbal clients. This solid state device allows a client to select any of sixteen messages on a lighted message board with a single specialty switch. The messages can be changed by slipping a new mask over the front of the board. In comparison with the hundreds of dollars these devices may cost commercially, the $32.00 cost of our device was welcome.

The Cooperative venture between AIIE Chapter 96 and the Broome Developmental Center has done good things for the

handicapped and its future as a long term project looks bright.

THE DISABLED CHILDRENS' SUPPORT GROUP

As the Chapters' successes at Broome Developmental Center acquired some degree of local notoriety, inquiries from other organizations began to come in. Early in 1985, the Chapter was approached by an individual who recommended that, if possible, the Chapter should contact a recently formed organization in the area, the Disabled Childrens' Support Group. The DCSG turned out to be an organization of parents of handicapped children that were in an at-home rather than an institutional setting, and had banded together for mutual support. Having by this time begun to realize the enormous costs involved in raising a disabled child, The Chapter put a small engineering team together and contacted the DCSG.

The Support Group invited our team to one of their monthly meetings. At that meeting we showed them some of the BDC projects and demonstrated some of the quick toy/equipment modifications we had as "on-the-shelf" projects, what some of our pending projects were, and what we felt was feasible for future development. Profound astonishment greeted our presentation on the difference in cost between purchasing some of the special equipment that they wanted and a do-it-yourself approach. As we had suspected, the costs of raising their handicapped children was so great that much of the needed or desired equipment was simply out of reach, financially. We ended our presentation with a formal offer to set up and run a program similar to that previously described at Broome Developmental Center; i.e., we would teach them the skills, do the engineering and they would build the equipment. The pact was forged that evening, and another joint venture was begun.

Chapter 96 began by canvassing several local suppliers of industrial materials and equipment for donations and samples. A local tool distributor supplied several sets of hand tools, soldering irons, strippers, diagonal cutters, needle-nose pliers, etc., and several components distributors supplied wire, cable and other indispensible items. Along with some material previously stockpiled by AIIE, Chapter 96, a very complete starter kit was supplied to the Disabled Childrens' Support Group free of charge.

The initial construction session (we had determined on a learn-as-you-go approach rather than formal training sessions) found a spate of toys/switches and other equipment that was in need of repair or modification. These were fixed as necessary without starting any large project, and did some good while the two organizations got to know one another and the DCSG acquired some first hand knowlege of what could be accomplished by

applying engineering to their special problems. Because of the simplicity of the initial projects, a relaxed, informal atmosphere developed in which we probed for their long-range needs and further developed some ideas for what we might have the capability of achieving.

The next construction sessions produced a small pile of squeeze switches, operable by almost any disabled child. These squeeze switches, the design lifted almost intact from Burkhart, demonstrated to the DCSG that they could, with a minimum of training and practice, produce useful and reliable equipment in a "kitchen table" setting. A comparable toy modification had recently been offered commercially for about $95.00. Our do-it-yourself project accomplished the same modification, albeit with free labor, for $1.07.

Sets of paddle switches followed at even less cost. A circuit-interrupting interface was constructed (following a design developed at Broome Developmental Center) which allowed any battery operated toy to be instantly converted to remote specialty switch operation simply by inserting it between any of the batteries. A two lane slot car racing set was modified for a young cerebral palsey victim who could not operate the pistol grip controllers which came with the set. A special controller was designed and built which allowed the boy to control either or both of the two lanes. The modification had the advantage of having either lane controlled by a non-handicapped person, thus giving the boy the chance to interact in a competitive environment (and on equal terms) with siblings or playmates.

The first totally electronic project attempted by the Disabled Childrens' Support Group was a Conductive Solution Detector. One of the children in the group was paralyzed from the waist down and unable to tell when wetting occurred. The Chapters' volunteer engineers designed a circuit which would sound an alarm when the first signs of wetting appeared. The Detector not only inhibits skin irritation problems by allowing the changing of the diaper immediately, but may in time lead to the ability of the child to anticipate and thus prevent wetting. The circuit fits in a small plastic case the size of a cigarrette pack, with a sensor the size of a nickel placed in the lower regions of the diaper.

The first project of major complexity tried by the group was a system to allow a legally blind little girl to read normal books by means of a television-based expanded vision system. When it was learned that the girl could read letters of about one inch height, a system was devised wherein the book, magazine or homework assignment could be scanned by a television camera and displayed, much enlarged, upon an adjacent television set. Commercially available systems to perform the same function were found to be in the $4000 to $7000 range. By finding surplus equipment and arranging for its donation, Chapter 96 achieved a cost to the family of the girl of $32.40.

Electronic "Busy-Boxes" based upon tactile stimulation are in the works, along with some game boards which teach co-ordination and matching principles to the very young.

Immediate future plans include total environmental control systems based on computers. We have every hope of having the basic computers donated, and building the interfaces necessary to allow the disabled children to operate them.

BROOME-TIOGA BOCES ALTERNATIVE LEARNING CENTER

As more engineering manpower became available to the Community Affairs effort, the opportunity arose to start yet a third on-going project. The Chapter was contacted by The Broome-Tioga Board of Cooperative Educational Services Alternative Learning Center in Appalachin, New York.

The Alternative Learning Center, in their training and education of disabled children, needed a wide variety of special aids and equipment. There was on hand a significant inventory of specialty equipment. Much of this had been purchased, but much was also fabricated by the staff and by individual volunteers over the years. Some of the equipment was rudimentary in nature, some showed considerable cleverness and ingenuity in design and fabrication. The lack of standardization and second level of complexity equipment was evident, however, and BOCES appeared to have need of the kind of engineering approach already proven at BDC and DCSG. While some of the projects which the Chapter foresaw would involve the same kinds of specialty switches, modifications and interfaces, the opportunity to open the new area of educational equipment was an exciting challange.

An initial meeting with some of the Special Education Staff at BOCES outlined the resources of the Chapter, the possibilities inherant in an engineering approach, and some of the successes of the other projects. BOCES in turn gave us an appreciation of their needs, and a project was initiated. The assignment of a Chapter Project Manager began a series of design and construction sessions on a regular basis at BOCES.

Not long after the project started, the key individuals both at BOCES and at Chapter 96 changed jobs and were no longer available, but new people were found and the project is now under way again.

Chapter 96 has recently started projects with the Southern Tier Independence Center, the Norwich (NY) Day Treatment Center and the Cortland/Madison (counties) BOCES.

CHAPTER II

STARTING YOUR OWN PROJECT

This section is intended to provide some basic information on how you might go about starting and setting up your own comparable assistance project for the disabled. It is presented, without apology, as one way to go about it, based upon the authors' experience in the three projects previously described, not as the only way. Circumstances will vary with locale and your own needs and desires; and what has worked so well for us may not be the best way for your situation. The methodology and the structure are not carved on stone tablets anywhere. There is probably not one best way for all. The following should therefore be considered as guidelines, not as doctrine. The most successful project will be the one which is fluid, flexible and readily adaptable to changing needs and opportunities. The organization intending to set up such an assistance project should always tailor the project to their own desires and the needs of the handicapped they intend to serve.

Early on, someone should set forth, in the simplest possible terms, what the objective is. That sounds simple enough, but in the swirl of contacting an unfamiliar discipline, learning a new technology, and working in a strange environment, it is all too easy to lose sight of the goal. In industry, there is an old saw that states "When you're up to your fanny in alligators, it's hard to remember that the original objective was to drain the swamp." Keep the objective out in front of you. At the same time, if the opportunity arises to expand the objective, don't hesitate to review it and don't be afraid to raise your sights.

Given that your project will develop in a somewhat different manner that ours did, the following guidelines should be of some help in getting you over the first hurdles, getting started, getting organized (if you are not already), getting professionals involved, and lining up the supporting resources you will need.

ORGANIZE

Institutions such as state facilities for the care of the handicapped are already organized sufficiently to take advantage of the cooperation of a professional society. Parents or

families of the handicapped, or just concerned citizens groups who wish to support the disabled in their homes or communities, however, should think seriously about some minimum level of organization.

If there is no group already organized for the support of the handicapped in your area, try and start one. There are many very good reasons to do so. Psychologically, there is comfort to be had from continuing contact with others who are in the same situation, and in time of crisis or stress, it is a great help to have friends who understand fully your concerns and anxieties. Having an organized group also provides a pool of information, ideas and experience from which each member can draw. If the need to press local or state governmental agencies arises, a group of any size will be perceived by public officials to have more clout than an individual and will normally receive more serious attention. The same is unfortunately true of most professional societies, for different reasons. It will become more necessary as time goes on to publicize the activities of the organization, and the media are much more likely to respond to a request from a formal organization than one from an individual.

Traditionally when such groups form, they tend to be loose and unstructured; friendship, comraderie and concern for the task ahead fostering the cooperative spirit needed for the group to function without the need for a highly structured organization. Such groups tend to be formed with the idea of informally interchanging information on doctors, therapists, equipment, costs and other highly specialized topics which generally bring blank stares from the uninitiated. Forged by necessity, these groups provide a forum for parents and family members, and perhaps the disabled themselves, and remove some of the feelings of being alone with ones special problems. This aspect of such a group, i.e., providing the mutual psychological support to pull each other through the rough spots is a very valuable function, and benefits the disabled, but doesn't require any more organization than a coffee klatch.

When the group decides to become more active in the support of the handicapped, such as forming an alliance with a professional society, the unstructured nature of the group may proove to be a detriment. A professional society may wish or be willing to undertake an equipment project with such a group, but will always need a single point of contact, or spokesperson with whom to talk. This fosters the idea that the society can reliably deal with the group without having to deal with everyone individually. The two organizations can thereby function independantly and yet interface most effectively. The support group should, therefore, choose a "leader", whether the title be spokesperson, president or chairperson. President is a good, clear title that leaves no doubt in anyone's mind what the function of that person is. In every group there eventually emerges a "spark plug", the energetic person who is always telephoning, organizing get-togethers and so on. Such a member

is an excellent choice for president.

Having a president does not necessarily imply having a vice-president. Depending upon the circumstances and size of the group, you may or may not want a "backup" for the professional society to contact if the president is ill or out of town. In large organizations, the president may need an "assistant president", and V.P. is a convenient way to do it. The choice is yours.

There are several good reasons for having a secretary. Your group may find it desirable to have someone take notes, at least at the initial meetings, even if formal minutes are not desired. Construction and planning sessions will tend to be dynamic, and at first, before everyone has become accostomed to the world of electronic projects, whirlwind in nature. Ideas developed or conceived during these sessions need to be recorded for future reference. Long and short range goals develop around the table and should be noted. Action items and schedules for future meetings must be recorded and followed up with phone contacts before the next meeting. A deft hand and a shorthand pad are big advantages as the project gets underway.

Although it will usually be small, the group will eventually benefit from pooling some of its financial resources. Some materials are better purchased in bulk and divided as needed within the group. Rolls of wire solder and sleeving, and bottles of liquids are some examples. Tools will benefit all and should be purchased from the group funds. This setup will eventually necessitate a modest treasury and someone to manage it for the group, and a treasurer who can handle the funds should be appointed early in the game.

After the group has organized, some thought should be given to producing a pleasing, eye-catching letterhead. While this may seem to be a minor point, a letter on neat, distinctive letterhead will tend to grab the attention of the recipient, and foster the idea that the group is a going concern. Letterhead need not be an expensive proposition. If someone in the group is, or has access to, an artist, an attractive logo can be drawn up. Professional looking lettering is simply done with any of the "rub-on" lettering readily available at art supply and stationary supply stores. The lettering can be applied in minutes by anyone, and can be reproduced on a common office copy machine. Lettraset, Chartpak and Prestype are three commonly available and high quality brand names. If the group expands and feels the need for extensive coorespondence, a local printer can make stacks of letterhead stationary from your master copy very inexpensively. The printer may even do the job at cost or for free given the nature of the group and if he is requested to do it as a charitable donation. If anyone in the group has a computer with a graphics printer, a very nice letterhead can be done in minutes and printed out on command whenever needed. A local computer sales store may do the job for you as a service or as a demonstration. Know exactly what you want the letterhead to

look like before you go, so that their time will not be excessively consumed. Severely handicapped people are the thrust of many computer applications, and the sales people, if knowlegable at all should jump at the chance to show you what their wares are capable of doing.

Some samples of simple letterhead done with press-lettering and on a computer are shown in Figure 2-1 below:

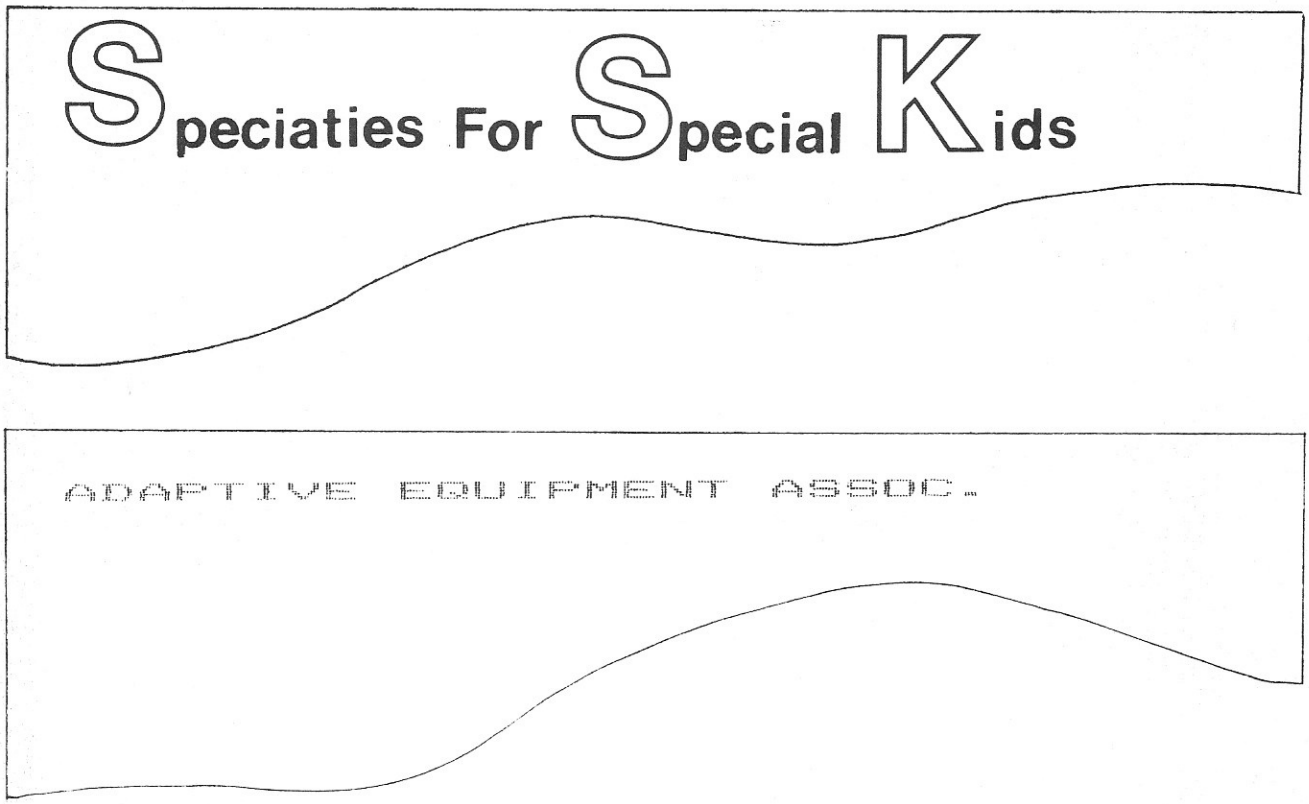

After the group is established as a functioning organization, with officers, perhaps with a charter or other published goals and objectives, regularly scheduled meetings and so on, someone should take on an action item to look into the possibility of obtaining a tax exempt status for the group. Tax laws and structures vary widely from area to area, and a comprehensive how-to-do-it section is beyond the scope of this book, but such tax-exempt status, especially in those communities subject to local and/or state sales taxes, is a goal worth some trouble to achieve. In the authors' home state, for example, sales taxes amount to seven percent of purchase price. Getting tax exempt status for the group would have the effect, therefore,

of increasing the financial strength and buying power of the group by that amount. Put another way, the value of the work for the handicapped is increased by seven percent - free!

CONTACTING THE PROFESSIONALS

The value of a cooperative venture with a professional society should by now have become quite evident, but who are they, where are they, and how best should the contact be made?

Once the support group has been organized and a committment made to seek this kind of a cooperative effort, one of the professional societies involved in the electrical/electronics field should be contacted and brought on board. While the authors are understandably prejudiced, by long association, toward the American Institute of Industrial Engineers and the American Society for Quality Control, these are by no means the only professional societies available, nor do they have a monopoly on expertise. Many fine organizations are available and a listing is provided along with addresses of national headquarters in Appendix B.

A listing of professional societies in your area should be readily available from any of several sources. The business desk of most local newspapers will have an up to date listing of the active chapters and organizations in the local area, complete with a name and phone number for an initial contact. Indeed, most papers publish a weekly "calendar of events" such as meetings of professional societies. A Chamber of Commerce that is doing the job for its community will also be a good source for such a listing, as well might a Better Business Bureau.

Assuming that these avenues don't lead to finding a local professional society chapter, the next step is to write to some of the national headquarters and ask for the address and phone number of the nearest local chapter. The headquarters should respond shortly with the desired information (but don't be surprised if you also get solicited to join).

With a bit of luck, there will be more than one professional society in your area. If there is, the next step will be to attempt, very discretely, to select the one best suited to help. This process is delicate, for in the event that your first choice is unable to accomodate your group, it will be better if your second choice doesn't know that they're your second choice. Since local chapters and organizations vary widely in size, capability and inclination toward community service, one way to go about the selection process is to ascertain how large an <u>active</u> membership the chapter has. A phone call to an officer of the local chapter should supply this information, and, in general, the larger a chapter, the better the chance that they will have active programs, available

manpower, and a concern for doing active work in the community.

Once an organization is selected, the first step should be to contact the president of the local chapter, preferably in writing and on letterhead. A letter, rather than a phone call is much more likely to elicit a favorable response. This letter should state that your organization is formed for assistance to the disabled, that technical help is needed, that you believe that his organization is well suited for the task, and ask if he would be willing to meet with your officers to discuss his taking on a community service project.

Bear in mind at this stage, that unless the society has had prior dealings with the handicapped, they will not know the terminology, and may get the mistaken impression that the equipment needed is very complex or esoteric. You should get the point across that the first needs are likely to be exceedingly simple, but that the potential is there to grow into sophisticated equipment. In any case, a copy of this book should be made available to the society in advance of the first meeting in order that they be able to familiarize themselves ahead of time with the task ahead. As stated in the release in the beginning of this book, you may feel free to make copies for such purposes, as needed.

If you have exhausted every avenue in trying to contact and involve a professional society, and have not had any luck at all in doing so, don't give up. A second source of help may be just as good. Find out if there is a local electronics manufacturing firm operating in your area. If there is, you will have a source of engineering help available. Assuming no one in your group knows an engineer in this firm who could be approached directly, contact the firm itself. A logical starting point is to find out who is the Manager of Community Relations or Public Relations for the firm. This man is usually measured by the General Manager on how well the firm comes across in the community. The chance to arrange for some of his employees to engage in a community service project, particularly one in support of the handicapped, should set him off on a frenzy of recruiting for you.

Don't think this is a second best approach either. The people in industry are every bit as professional as a professional society. The highly successful project that started this book, while sponsored and organized by the American Institute of Industrial Engineers, was staffed almost entirely from the ranks of a General Electric Department.

Depending upon the Chapter's size, experience in community service projects and inclination, the first meeting may be with one or two officers who have been delegated to evaluate whether the Chapter wants to get involved, or a larger group if they have already decided that involvement is desirable. In any event, the first meeting is a critical time, for it will most likely set the tone for how well the project will get started.

CHAPTER III

YOUR FIRST SESSION

The most important thing to remember about your first session with the engineering professionals is that it will be much like the first meeting between Columbus and the American Indians. Neither knew anything about the life, desires, problems and concerns of the other, and they didn't even speak the same language. Engineering people throw around phrases like "phase shift oscillators" and "shotke logic" that mean nothing to the average layman. On the other hand, unless one of them has had a handicapped family member, the language of your group will be just as foreign to them. Go slowly! Try to explain your end of things in terms they can relate to and don't be embarassed to ask the definitions of their terms. The object is to communicate, and a common language must develop between the two groups. You will have a head start in this regard, for a Glossary of Terms for electronic components appears in Appendix B of this volume. If the Engineers have read over some of the projects described later in this book they may glean a little initial insight into your end of things too.

This first meeting with the officers of the professional society is not necessarily the time to get too involved in the deeply technical aspects of individual projects. It is much more important to lay out a program for getting started in a positive and well organized fashion. The object is to get to know one another, and for each to become familiar with the goals and resources of the other. The critical points that need to be made are:

1. Your organization cares for or supports the handicapped.

2. Who the handicapped are.

3. Many kinds of specialized equipment are needed that are either unavailable ar any price or are too expensive to buy.

4. You are seeking their help in designing and building the needed equipment.

These discussions will set the stage for organizing an effort in which the two groups will form an equipment team which will meet periodically to design and build. A good way to wind up the initial meeting is to select and discuss a very simple project that will get the first construction session off to an

easy and successful start. This is important to get some immediate and useful results, set the tone for success, and demonstrate to all that simple projects can have a big impact. An excellent place to start is with a simple specialty switch for a child, and the modification of a battery-operated toy for it to operate. Several suitable projects are available for selection from the Appendices at the end of this book.

To recap, then, The initial meeting with the members of the professional society should accomplish the following goals:

1. Establish a team which has agreed to meet on some periodic basis to design and build equipment for the handicapped.

2. Establish a meeting place where the work can be done.

3. Make a list of the tools and bulk materials needed to start and who will try to get what.

4. Pick a simple project to start on.

5. Set a date for the first construction session.

Your group should assign someone to be the "whip" who will keep notes of who has agreed to have what at the next meeting and will agree to make gentle reminder calls a couple days ahead of each construction meeting to make sure eveything will be on hand when needed. Nothing is quite as frustrating to the equipment team as finding that everyone has shown up for a construction session and one critical item for the nights' project is missing.

THE FIRST CONSTRUCTION SESSION

The first construction session should be a fascinating experience. Your group will see first hand how quickly and simply much needed equipment will really go together. By observing, inquiring and doing, much of the mystique will go out of what was previously thought of as "exotic" equipment. You will see that it is truly not difficult or remote, but just another cake to be mixed on the kitchen table. A simple specialty switch and toy modification, quickly completed and successfully accomplished, duly celebrated with coffee will cement the individuals around the table into a team and set the tone for bigger and better things to come.

At future construction sessions, your group will explain what problems of the handicapped need to be solved; i.e., "We need a switch that can be operated by someone who can only move such and such a way...." or "we need something to do this....". A little blue sky thinking session will follow in which an approach will be settled upon, and usually one of the professionals will take on the responsibility of making a

schematic diagram and parts list so the item can be built at a future session. Several such projects should be in process at any one time so that if one is hung up for a while, another will always be available for construction. In some cases the solution will be so simple that it can be attacked immediately with materials on hand. We have often come up with solutions that were turned into equipment within an hour of the problem being stated.

CHAPTER IV

LINING UP THE RESOURCES

There are two distinct layers of resources needed to bring the equipment team up to its full potential. The first level is a lay-in of enough tools and materials to start and maintain a program of simple projects; specialty switches, toy and entertainment equipment adaptations and various interface boxes.

At the beginning of your series of construction sessions, the professional society will quite likely want to show you what to build and how to build it. The authors recommend that your group start doing the actual building, or some major portion of it, as soon as possible, even if the professional society offers to do it for you. The skills are not difficult to learn and will eventually, as proficiency is gained, provide a modicum of technical self-sufficiency to your group, give you something valuable to carry away with you, and spread out the workload between the two groups. Eventually, you may even be taking on minor repairs, construction projects and modifications yourself.

The first session in which some construction is actually undertaken will require some tools and materials. Your group should lay in a modest initial assortment of tools, but don't go whole hog too early in the game. The engineering folks may bring enough to start you off, and the buying can be postponed until you see if an industrial "angel" appears with some used tools from a housecleaning in his tool crib. If no one in your group is employed in the electronics industry, the professional society will know how to get that sort of thing done.

As a minimum, the first construction session should have available the list of tools shown in Appendix D. The list is split into an initial minimum lay-in, a second level which are most desireable if the equipment team appears to be working out as an on-going project, and a third level which would be very nice to have, but are not absolutely essential. Some of these tools will undoubtably already be on hand.

There should also be a minimum lay-in of basic materials. In addition to rosin core solder and rosin flux (NEVER acid flux or acid core solder) many of these "consumable" materials will be available readily. The more you can get together ahead of time, the less your professional society will have to arrange. These will consist of a large sheet of cardboard to cover the table you will be working on. A kitchen is an excellent work area for non-

institutional groups, but the hostess may lose some of her enthusiasm for electronic assembly if soldering iron burns appear all over her dinette set. An ounce or two of isopropyl (rubbing) alcohol for cleaning flux from solder joints is desirable as well as some cotton swabs for applying it. A roll of masking tape will come in handy as will a few clean rags for cleaning soldering iron tips and catching spills.

These minor tools and materials will get you off to a good start and are fine for the smaller, simpler projects that you will be building. As the equipment team grows more experienced, however, the need and desire for more complex and sophisticated equipment will surface. After the initial successes, the team will begin to realize that its potential for making truly valuable contributions lies a little beyond what it might be able to accomplish on its own. Once this level of success is achieved and solidified, it is time to begin recruiting the next level of resources, which will turn the equipment team into a competent, effective organization, capable of taking on medium to large, complex tasks and fulfilling the roll of being able to provide equipment that the average family could not afford or the average institution could not justify.

These second level resources are summarized below, and should be available in one form or another in every medium sized municipality.

<u>A PRINTED CIRCUIT BOARD SHOP</u> Printed circuit boards, also variously referred to as printed circuit cards or printed wire boards, are a means of greatly reducing the labor and skill levels required to build more complex electronic circuits, and at the same time providing a method of reliably and simply reproducing or cloning previously built items. In its simplest form, a printed circuit board is a piece of fibreglass or composition board with a layer of copper laminated to at least one side. Holes are drilled in this board for the leads of the electrical parts of the circuit, and the copper is selectively etched away from areas where connections are not wanted. Assembly of the circuit is then a matter of dropping the components into the holes and soldering them to the copper that remains. All of the connections are made by the remaining copper, and no complex and time-consuming wiring is required. The manufacture of the printed circuit board itself is mainly a photographic expose and etch (develop) process, and hence, once the artwork (negative) is made, copies (prints) can be made identical to the first. This is an enormous advantage where more than one of a given circuit is desired, or where you want to share your success with other organizations.

It is possible to make single (non-reproducible) printed circuit boards simply and safely in your home using kits available in electronics supply stores, but the advantages of the reproducible photographic process described in the preceding paragraph are so compelling as to make it very worthwhile to search out a shop to do the work for you. In the industrial

arena, manufacturers of electronic equipment either have their own printed circuit shops or they but from a specialty shop which does nothing but such circuit boards. If a specialty shop exists in your area, it is the best place to start. An electronics manufacturer is a pretty good alternative, but if it is involved in defense work, its internal accounting or security regulations may prevent it from doing your kind of work, even if it might want to from a community relations standpoint.

If you can find a suitable shop in your area, the fact that you will be asking for small, single sided, non-critically dimensioned boards for the handicapped will probably result in the firm volunteering to do the work for no fee, and they will probably supply the materials from their wastage. They will, of course, expect your team to do the artwork so all they will have to do is the board processing. Having an artwork that can be copied and mailed has the additional benefit of allowing you to mail a copy to another group accross the country and will allow them to have identical boards built in their area. If they have automated processing, they may well want you to do the drilling as well. This should present no particular problem. Chapter X will give you the basics of how to do an acceptable level artwork for this kind of project.

Finding a suitable board shop will make life easier for you, and result in better, more reliable equipment for the disabled you serve.

A WOODWORKING SHOP At some point, having a competent woodworking shop allied with your equipment team will be a positive asset. For larger projects, like busy boxes, table mounted equipment, tray mounts for wheelchairs and the like, someone who really knows woodworking can be worth a great deal. You may want to scan your local industry and see if a company is available which deals in making furniture, cabinetry and so on. An individual who works in wood as a hobby is ideal, however, for to him, woodworking is a labor of love, and the degree of old fashioned craftsmanship he (or she) will bring to the job is probably unavailable anywhere else.

You should also scan the local news media to see if there is a woodworking club in the area. This is probably the most attractive alternative, for there will be an even more extensive breadth of skills, tools and experience. Chapter 96 was extrordinarily fortunate to link up with the local Twin Tiers Woodcrafters Guild of Binghamton, NY. This organization plunged into the task of supplying our woodworking needs, gobbling up every idea we had for needed equipment, supplying some more, and presenting us with thoroughly professional, furniture-grade parts. The handicapped in our area will benefit greatly from their efforts.

MACHINE SHOP PARTS Having access to a machine shop and a machinist is an enormous asset for an equipment team to have in its back pocket. While most electronic assemblies don't need

much more than common hand tools and skills, nore complex jobs will often need a couple of specially machined parts. When this happens, there is almost no alternative to having a skilled machinist and a small machine shop available. As with printed circuit boards, a local industry which will run a small part through its machine shop or tool room is your best bet. The professional society will certainly know if there is such a shop locally and who to approach. Any shop with a heavy drill press, an engine lathe and a milling machine should be able to produce any machined part an equipment team should ever need. If you have had to approach a local industry rather than a professional society for your engineering support, the machine shop should be no problem. If you have to find such a shop on your own, try the yellow pages under "Tool and Die Shops". These are small shops that normally turn out specialty machined parts for other industries. They are often small firms in a competitive field but may have both the time and inclination to help once they know what the project is all about.

A hobbyist in the machined parts field may be an alternative if a machine shop is completely unavailable in your area, but the hobbyist will probably be less effective than a hobbyist in the field of woodworking. Such people tend to be very clever and resourceful, but the enormous cost of machine tools will tend to limit the kinds of things that he or she can do.

It is possible to do a wide variety of projects spread over several years without ever needing machined parts, but if such an operation can be brought aboard, it will be worth the effort to do so.

<u>A SHEET METAL SHOP</u> All of the good things that we have said about machined parts apply equally to sheet metal shops. The need will be occasional, and you can work around it if you must, but if a sheet metal worker can be brought into the effort, life will be easier. Industrial Sheet Metal shops are best, hobbyists almost non-existant, and the professional society is the best bet for finding a shop which will be willing to take on the occasional small job.

<u>A PLASTICS SHOP</u> A local firm that does plastics work is also a valuable asset. Lap trays, communications boards and a large number of other projects will benefit if a source of sheet plastic parts is available. The professional society will again be the best source of contacts in the local area for industrial or commercial plastics houses. If none are available, your local craft supply stores may be able to direct you to a local hobbyist who will be willing to put out a few parts for you once the nature of the project is known.

These second level resources are a wonderful asset to have, but if one or more are simply unavailable in your area, don't despair! It is quite possible to work around the problem and still get excellent results. Printed circuit boards can be made

at home by members of your group. Wood parts can be fashioned by the home handyman that will be fully servicable even if not professionally done. Machined and sheet metal parts can usually be eliminated from designs if enough ingenuity is applied, and simple plastics work can be taken on by the home handyman. You can learn to operate quite effectively completely on your own if you have to. One good way, if your group is large enough is to divide the responsibility for these commodities among your own people; i.e., one person for plastics, one for printed circuit boards, etc. In that way, the group will gain some expertise and some "experts", and the person responsible will learn where to get help in his specialty, even enlisting a local shop when the time is right.

Above all, don't wait to take on projects until all the resources are lined up. Plunge in and start building. The resources may be easier to set up after the equipment team is a going concern. It may even be better to wait before trying to enlist the aid of local shops until you actually need a specific part. Industrial people may be more resopnsive to getting involved if the request for help is for a specific part, with an identifiable end result than a nebulous request to help"someday on something if we need it" where they may not understand that the scope of the help needed is (to them) very small.

One thing that has been a constant source of amazement to the authors is the depth and variety of resources and volunteers that exist, out of sight, in every community. One good way to tap these resources is through a little publicity. We recommend strongly that after the equipment team has gotten established and had a series of demonstrable successes, that one of the media be contacted to see if a newspaper article or a human interest spot on the local TV news show could be arranged. This is a great way to pave the way for approaching companies and individuals later on, and may well bring inquiries by those who want to volunteer time or services. The local newspeople understand that an appeal for volunteers is part of the story and are usually glad to give a spokesperson the opportunity to take a minute (or a paragraph) near the end of the story to make a plea. The object is obviously visibility for your team and the task at hand, but the most valuable aspect is that it may bring hidden resources to you.

PROFESSIONAL MEDICAL INVOLVEMENT - The engineers of Chapter 96 have several times conceived devices that were excellent from an engineering viewpoint, but vetoed by one of the Occupationa Therapists on the grounds that the patient should not perform the motions required to operate it. Engineers, generally know nothing of the physiological aspects of Adaptive Equipment. Therefore, it is our considered opinion that the **SINGLE MOST VALUABLE RESOURCE** of an Adaptive Equipment Team is to have the active participation of a Doctor or a licensed Occupational Therapist!

CHAPTER V

SUGGESTED DESIGN STANDARDS

The subject of design standards for equipment for the disabled is something that the professional society will really have to work out for themselves, given the environment and desires of the equipment team. The authors are providing in this chapter some ideas for suggested standards based upon our admittedly narrow experience with our handicapped groups.

Design standards should serve three main functions in work of this kind:

1. Standards should insure an acceptable level of reliability and quality in the equipment constructed.

2. Standards should guarantee the absolute safety of the equipment for the user, within all foreseeable circumstances.

3. Standards should insure that the equipment constructed will be interchangable to the greatest practicable degree to allow toys, interfaces, entertainment equipment, specialty switches, etc., to be swapped, handed down and mated with commercially available equipment.

The authors would suggest the following as areas for discussion and the setting of local standards:

<u>STANDARD PLUG/JACK INTERFACES (1/8" MINIATURE)</u> One of the first problems that the Chapter 96/Broome Develpmental Center equipment team was called upon to solve was that of equipment from various manufacturers that would not plug together. This problem, essentially buying a switch from one source and a toy or recorder from another and having a plug and jack which would not mate, is one of a lack of standards. Chapter 96 quickly established a local standard for equipment interface which ensured that all equipment built would use a standard 1/8" Miniature Phone Plug and Jack set. This standard, applied across the board, would ensure that any switch built would mate with any interface or piece of equipment, and that any of the disabled at the facility would be able to use any of the equipment modified for anyone else. The flexibility thus gained would be complete. The suggestion to standardize on this jack/plug is from Burkhart (1).

---

(1) Burkhart, L.J. "Battery Operated Toys and Educational Devices For Severely Handicapped Children"

The 1/8" Miniature Phone Plug and Jack are readily available around the country, easy to wire, and small enough to fit in the tight places needed in small toys and miniature entertainment equipment. If a radio or other piece of equipment is already fitted with a different jack, the 1/8" Miniature can be added in parrallel without defeating the original installation. The 1/8" Miniature Jack comes in open or closed circuit variations, the latter allowing the device modified to retain its non-modified (normal) character even though modified. Chapter 96 strongly recommends that this standard be adopted. The use of this standard provides the advantage among all users that toys and equipment so modified may be loaned among the users and have full interchangibility. If a formal program of loaning is started; i.e., a "Toymobile" for the handicapped, the use of a standard such as this is essential.

The wiring and function of the open and closed circuit varieties is shown in Figure 5-1 below.

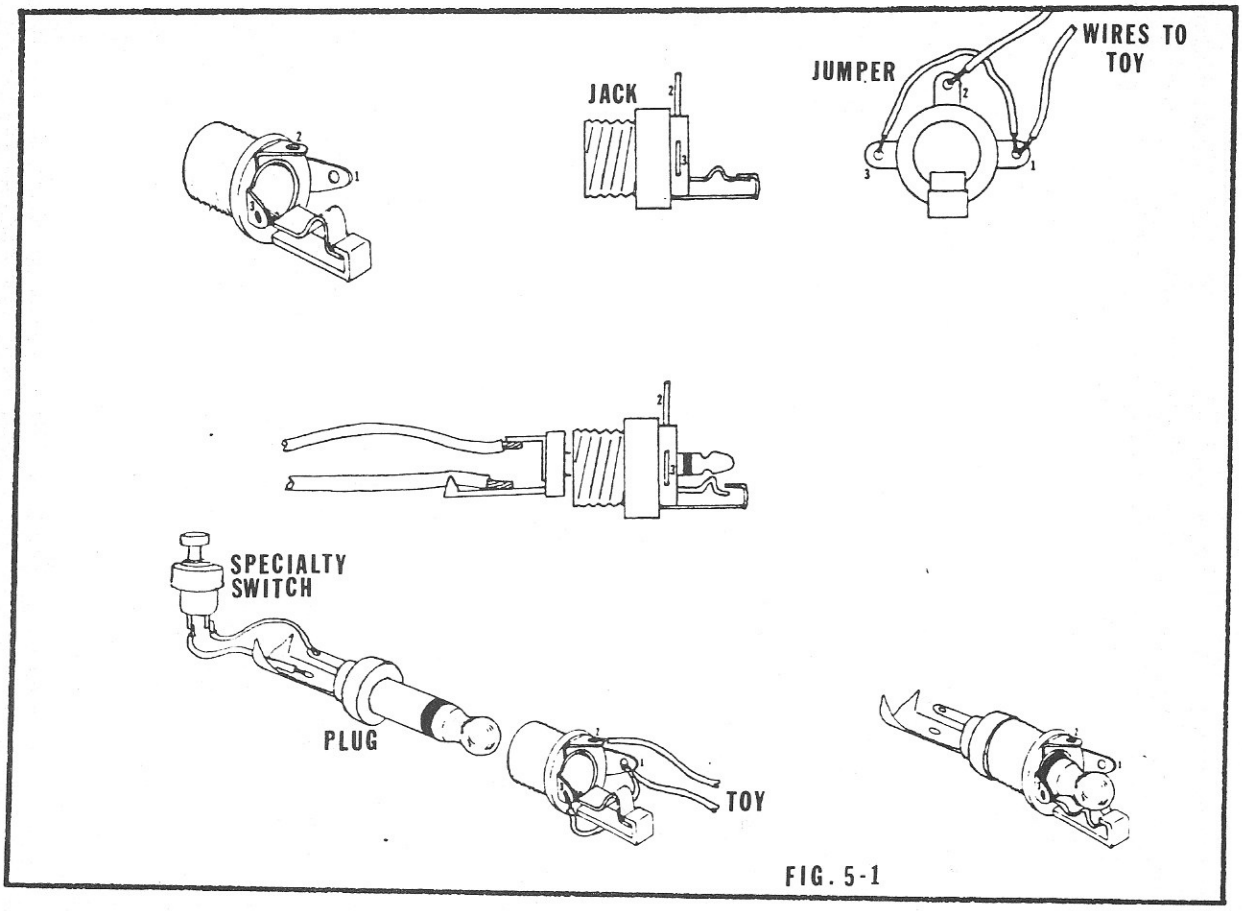

FIG. 5-1

STANDARD BLOCKING DIODE It is inevitable when working with battery operated equipment that sooner or later someone will put a battery in backwards. Even with a 9-volt transistor radio battery, it is possible to momentarily connect the battery in reverse while changing it even though it has a "polarized" plug. For toys that have only lights and/or motors, this is not a problem; however, for some of the electronics equipment that will be constructed by the equipment team, even a momentary reversal of the batteries can be catastrophic to the delicate electronics. The incorperation of one simple, low-cost blocking diode, such as the 1N5817, in series with one battery lead, can insure that no current will flow in the event of a reversal, the battery will not be drained, and that no damage to the electronics will occur. This installation is strongly recommended for adoption as a standard for all electronics equipment being designed for the handicapped.

ON-PERSON USE OF NICKEL-CADMIUM BATTERIES Rechargable nickel-cadmium batteries (NiCads) have a lot of advantages over simple Alkaline or Carbon batteries for use in toys and other electrical equipment. Readily available chargers and batteries along with a bit of forethought will insure a household or institution with a virtually inexhaustable supply of fresh batteries, with long-term savings, albeit at a higher initial purchase price. There is, however, an area of concern and possible danger in certain applications, in regard to a characteristic of these batteries called effective series resistance (ESR). Carbon or alkaline batteries have a fairly high internal resistance, so that under short-circuit conditions, the ESR limits the current flow out of the battery to relatively safe limits. The NiCad, on the other hand, has a very low ESR, and extremely high currents may flow when the battery is shorted. In use with the handicapped, this may cause an unacceptable hazard. A shorted NiCad may become hot enough to start a small fire, and certainly get hot enough to cause discomfort or burns.

A device designed to be carried or worn on the person of a handicapped individual should therefore not contain NiCads. If a short circuit were to cause the battery to burn or begin to melt, the disabled person might not be able to move or otherwise get away from the battery. Chapter 96 recommends most strongly that NiCads not be used in any equipment which will be worn on or carried on the person.

SINGLE-SIDED PRINTED CIRCUIT BOARD DESIGNS Industry uses a wide variety of different types of printed circuit boards;

Single-sided (copper circuitry on only one side of the PCB), double-sided (copper on both sides of the PCB); Multilayer (copper in laminated layers within the PCB) and flexible/ bendable PCBs which operate in non-flat applications. For those projects in which the advantages of printed circuitry are desired, the average equipment team will find that single-sided PCBs will usually suffice, and for most, will be all that they will be willing to take on. Certainly, a single-sided PCB has the most chance of being replicated in other locations, and for this reason, the single-sided PCB is the most desirable. Chapter 96 strongly recommends that single-sided configurations be adopted, even if the professional society has sources for more complicated types.

DOCUMENTATION The desirability of being able to swap designs with equipment teams in other locations demands that the designs be recorded and documented in some transmissable format. A drawing structure of Chapter 96s type is desirable, but not necessarily required. The important idea is to record the design so that someone at another time and/or location can pick up the documentation and replicate the results of your teams' labor. Chapter 96 strongly recommends that some standard format be adopted for recording sketches and other design notes and a file maintained for these. (How about someone starting a design exchange service?)

PRODUCT SAFETY No design can ever be made totally, 100% safe. Stairs and ladders, in common use for centuries are still a major area of accident concern. Each equipment team should look at its own type of equipment and users and establish standards to insure that the equipment produced is as safe as it is humanly possible to design and build it. Some guidelines to follow are:

1. Keep the handicapped isolated from 110 volt A.C. line voltage. Familiarity breeds contempt, and we too often forget that the common household line voltage is LETHAL. The physically handicapped, children, the elderly and the retarded are even more susceptable than we to the threat of electrocution. Isolation of the handicapped from 110 volt A.C. is an absolute must. Our "A.C. Interface", described later is one example of this isolation. In the absence of an electrical engineer on the equipment team, any design or modification of equipment that incorperates household voltages should be checked and approved by a competent, licensed electrician who has been fully apprised of the intended use.

CORDS BETWEEN EQUIPMENT The equipment under consideration will of necessity sometimes involve wires between the handicapped person and the equipment being controlled. These cords can pose a hazard for falls and tangling. Exposed, dangling cords should be kept to a minimum, and wires dressed out of the way where possible. For the retarded and children an additional strangulation hazard exists. Local conditions will dictate your own solutions.

DESIGN FOR PARTS AVAILABILITY As stated previously, one of the prime goals is to provide for the replication of designs at other places and times. One standard which is necessary to allow this to happen is to insure that devices are designed around parts which are available to everyone. There are several sources for electronic components which are available to all. Several are listed in Appendix C. Chapter 96 has settled upon Radio Shack stores as the source for most of its projects, because the chain is nation-wide in nature, the parts are of acceptable quality and cost. Mail order houses, while providing parts of equal quality and cost involve a built-in delay and some have minimum order values.

However attractive surplus supply stores and grab-bags appear, if they yield parts that are not available later on or to people in other areas, the designs incorperating them cannot be reproduced without extensive redesign.

CHAPTER VI

CONTROLLING THE COSTS

As the reader will have realized by this time, the major cost reduction involved with the equipment team is the do-it-yourself approach. Given that the major reduction comes from custom building your own equipment, there are further ways to hold down even these comparativly small costs.

The professional society in particular will have the contacts needed to acquire samples of materials and components from those companies and representatives who supply to industry. Samples, even of relatively expensive parts, are readily available to those engineers in industry who will be involved in testing and selecting materials prior to production line use.

The experience of Chapter 96 has been that if sales representatives of companies that supply components know what an equipment team is doing, and what the project is all about, most are more than willing to donate, free of charge, samples of their wares to the cause. These samples are normally yours for the asking, and can save major costs involved in a project, as long as the privilege is not abused, and the company receives a letter of thanks stating the type and value of the donation and the date. In this way they can get the tax write-off, and get the community service brownie points associated with the donation.

There is, however, a point of professional ethics involved for the engineer who asks for the donation. He should state up front to the company representative that the materials are for a non-profit, aid-to-the-handicapped organization, that he is not acting as a representative of his company, and that relations between the supplier and his company will not be affected one way or another by whether the supplier gives him samples or not. This will go a long way toward precluding any conflict of interest problems along the way.

Donations do not need to be samples either. Some companies periodically clean out old stocks of materials. If you make your pitch to them early, they may someday come up with more goodies than you can carry away, simply because they don't want to stock it anymore. Again, a proper letter from your organization will help them to get both tax and community service credit for the donation.

As previously mentioned, Radio Shack grade components, as opposed to the high-reliability Military Specification parts many of us are used to using in our jobs, are more than adequate for use in equipment for the handicapped. These commercial, over-the-counter type parts are normally very inexpensive, and their use will drastically cut the material cost of any project.

Some electronics supply houses run periodic sales of "grab bags" of electronic parts, and some are really outstanding values. Entrepreneurs will buy up stocks of parts from industrial programs that have failed, or become surplus, and will bag them without sorting for quick, cheap sale. These grab bag assortments can be an added way to reduce the cost of materials for the equipment team, but caution is in order. These grab bags often contain "oddball" parts for which no use will ever be found. They should be screened by and only purchased with the advice of someone experienced in components, or the low price may lead you into buying something you will never use.

A real money saver can be the establishment of a device we call the Mighty Junk Box. Even before the first construction session, a formal junk box should be started. Ingenious solutions often make use of unexpected materials. In the middle of an evening construction session sometime, being able to reach into a box and pull out a piece of foam rubber, some string, a spring clothespin or a paper fastener may enable the team to complete an evening project that would otherwise hang fire until the next week. Sometimes just the presence of a box full of odd materials will suggest a cheaper solution to a knotty design problem. Start collecting springs, safety pins, plastic spoons, and anything else that comes to hand. Burkharts' book is a veritable treasure of how to use common household materials to provide low cost (or zero cost) solutions to engineering problems.

The Junk Box is merely one part of a whole science of cost reduction that might be labelled " Use of Alternative Materials". The engineer, faced with a product design which is too high in cost will often go back through his design, item by item, and ask himself of each, "What other material will do the same job or perform the same function?" This introspective game of "Twenty Questions" will bring some fascinating possibilities to the fore. For example, one of the neat little chassis boxes for some projects will cost several dollars at an electronics supply house. With a little sandpaper and some varnish, a better quality wood cigar box, usually available for the asking, will do the same job, and may have a more aesthetically pleasing, "homey" appearance.

Most things you will be using are electrical components, transistors, capacitors, and so on, and these will certainly have to be purchased. There will be categories of items, however, like the chassis described above, where alternatives are possible. As the equipment team develops, and becomes more familiar with the requirements, you should more and more develop an informal system of looking at each new project with an eye

toward what are called in industry "make/buy" decisions; i.e., "Should we buy this item or attempt to make it". This will be a function of the skills and ingenuity available to your group, the urgency of a given construction project, and the amount of time and effort your group is willing to put into saving a buck.

CHAPTER VII
A BIT OF ELECTRICAL THEORY

The average person, having no background in electrical or electronic equipment, may take a look inside his TV set or Personal Computer and recoil at the complexity he sees. Electronic equipment may very well be very complex, but usually only if it is made to do a very complex task. For simple tasks, the electrical circuitry may be very simple, and with a short introduction, thoroughly understandable by everyone.

The simplest of circuits is shown in Figure 7-1. Here, a battery (power source) is connected to a light bulb (load) in such a way that the electricity flows out of the battery's minus

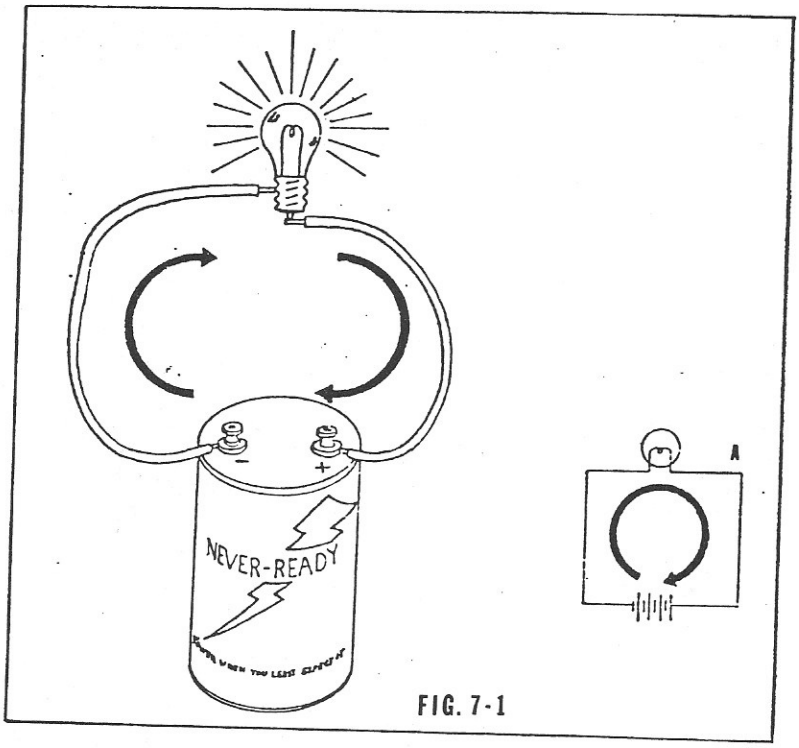

FIG. 7-1

or negative terminal, through the wire on the left, does its work in the bulb (converting electrical energy to light) and returns to the battery's plus (positive) terminal through the wire on the right. Electricity, by its nature, is such that the positive and

WARNING - THE TECHNIQUES DESCRIBED HEREIN ARE VALID ONLY FOR LOW VOLTAGE, BATTERY OPERATED CIRCUITS. WIRING OF 110 VOLT A.C. (HOUSE OUTLET VOLTAGE) SHOULD ONLY BE DONE BY A QUALIFIED ELECTRICIAN. 110 VOLT A.C. CAN PRODUCE A LETHAL SHOCK!

negative charges produced in the battery will try to cancel each other out. This may be thought of as a pressure (voltage) in the negative terminal trying to fill a vacuum in the positive terminal by causing electrons (current) to flow through a wire into the positive side.

Sketch "A" inside Figure 7-1 is a schematic diagram of the circuit. Schematic diagrams are the way electrical engineers think of the circuit. There is a particular schematic symbol for every kind of electrical part (**component**), and many of these are shown in a separate section, with a brief description of each. We will learn a little more of the symbology as we go along, but it isn't immediately critical to your understanding of the theory in this chapter.

Why doesn't the current flow right across the top of the battery from the negative to the positive terminal? Because the top of the battery is an **insulator** that does not permit the flow of electrons. Conversely, the wires are **conductors** which do allow the current to flow. Many materials can be used as conductors: copper, silver, gold, aluminum, salt solutions, tin lead and a host of others. Insulators, or non-conductors, are typified by wood, paper, glass, cloth, air, plastic and so on.

If the top of the battery were made of a conductor, all the current would flow directly across the top from negative to positive and the battery would almost immediately be depleted of its energy.

Engineers make use of the pressure of electrons by placing in a conductive path between the terminals, a device which will allow the electrons to flow from one terminal to another at a restricted rate, and use the restrictive (resistive) properties of this load to do useful work. Our examples show a light bulb as the resistive element, the useful work being the production of light. Most resistive loads, by the way, also produce heat, the heat in this case being a non-useful penalty. In other applications, the load may be a motor (as in clocks and toy cars), a heating element (as in toasters and fry pans), or a variety of other useful things.

WARNING - THE TECHNIQUES DESCRIBED HEREIN ARE VALID ONLY FOR LOW VOLTAGE, BATTERY OPERATED CIRCUITS. WIRING OF 110 VOLT A.C. (HOUSE OUTLET VOLTAGE) SHOULD ONLY BE DONE BY A QUALIFIED ELECTRICIAN. 110 VOLT A.C. CAN PRODUCE A LETHAL SHOCK!

Current flow is shown in our figures as heavy black arrows. Note that the current flow is always in a circle. This is the origin of the expression "an electric **circuit**". Current flows when this circuit is completed.

Getting back to our original battery and lamp circuit, what happens if we want to turn the lamp off? The simplest solution is shown in Figure 7-2. Cutting either conductor at any point, will interrupt the current path. This is known as **"breaking the circuit"**. The shears solution is a little drastic, however, and

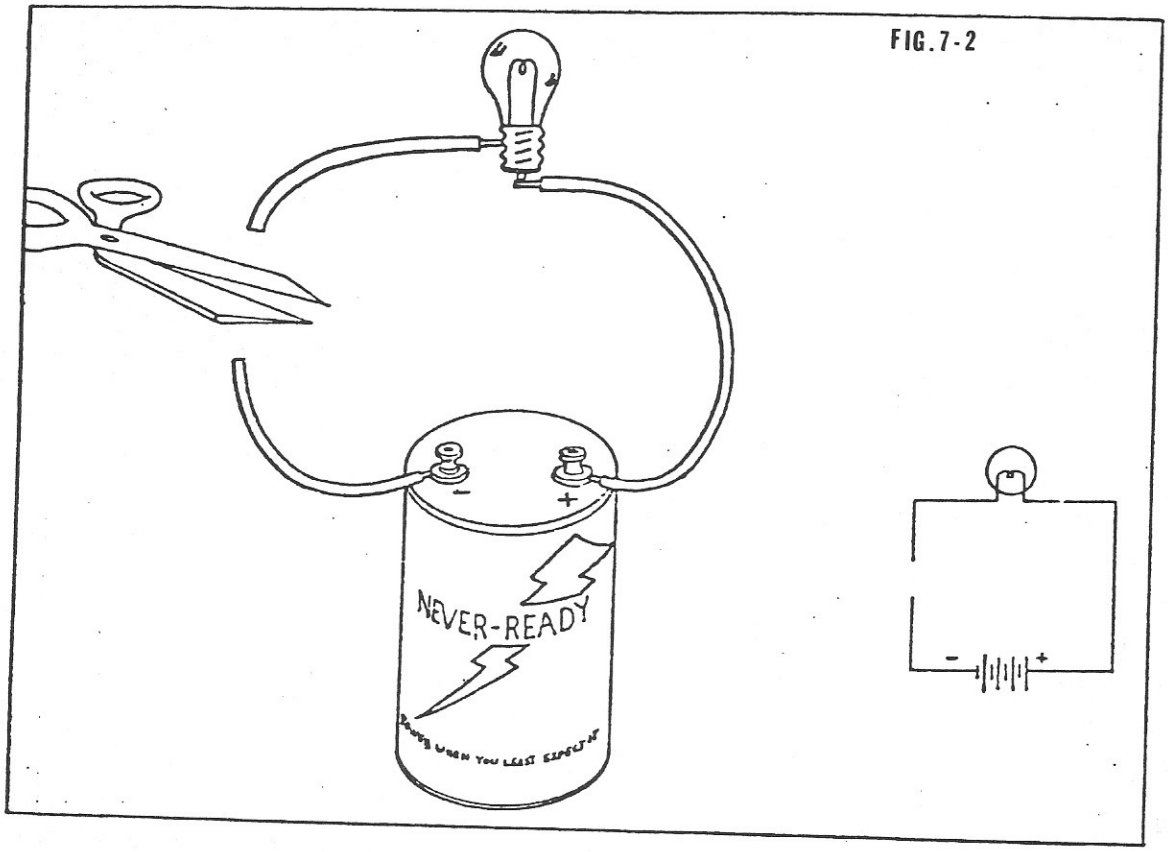

precludes the possibility of turning the lamp back on without a major repair effort. The solution to this dilema can be to make the circuit only a bit more complex. Let's install a switch in the circuit as shown in Figure 7-3. There are many kinds of swi-

WARNING - THE TECHNIQUES DESCRIBED HEREIN ARE VALID ONLY FOR LOW VOLTAGE, BATTERY OPERATED CIRCUITS. WIRING OF 110 VOLT A.C. (HOUSE OUTLET VOLTAGE) SHOULD ONLY BE DONE BY A QUALIFIED ELECTRICIAN. 110 VOLT A.C. CAN PRODUCE A LETHAL SHOCK!

tches: toggle switches (as shown in our example), microswitches, rotary switches, mercury switches, magnetic switches and specialty devices. All serve the same basic function: to **make** or to **break** the circuit in which they are installed.

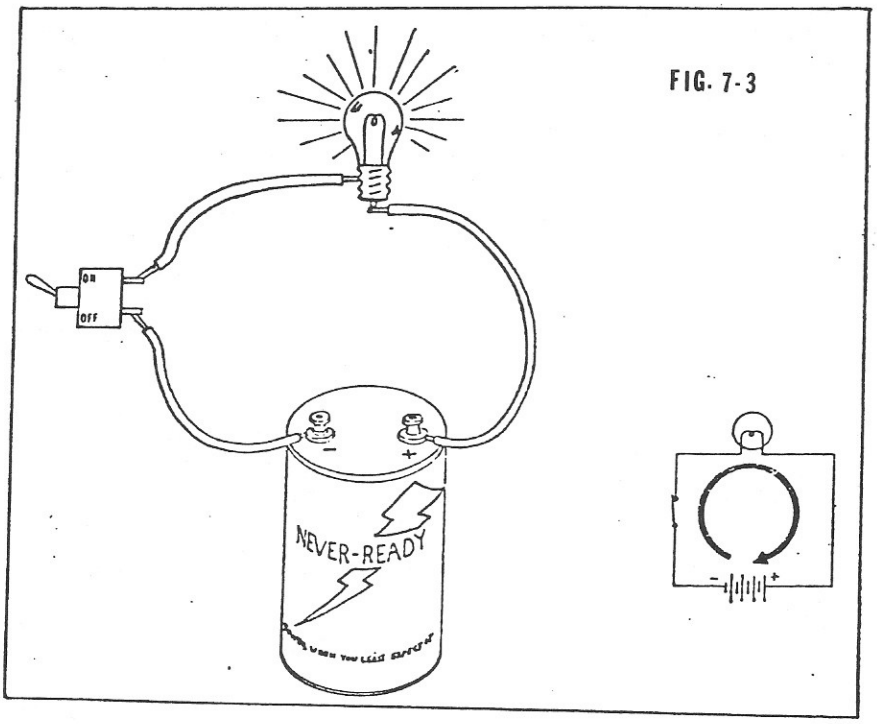

FIG. 7-3

The electrical engineer would draw the schematic diagram as shown in the inset, Figure 7-3, in the On (**closed**) position. To show the switch in the Off (**open**) position, he would draw it as shown in Figure 7-4.

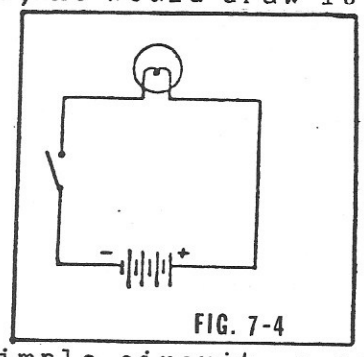

FIG. 7-4

Look at Figure 7-3 again. What has been constructed is a common household device... a flashlight. By connecting the switch and lamp to a household outlet instead of the battery, we have a table lamp. Replace the lamp with a motor and a propeller, and you have a fan. Put the fan in a box with an inlet hose and you have a vaccuum cleaner, and on and on and on..... all with the same simple circuit, a power source, a switch and a load device. This concept of a power

WARNING - THE TECHNIQUES DESCRIBED HEREIN ARE VALID ONLY FOR LOW VOLTAGE, BATTERY OPERATED CIRCUITS. WIRING OF 110 VOLT A.C. (HOUSE OUTLET VOLTAGE) SHOULD ONLY BE DONE BY A QUALIFIED ELECTRICIAN. 110 VOLT A.C. CAN PRODUCE A LETHAL SHOCK!

source, a switch and a load is the same for the common appliances discussed above as for the toys, radios and recorders that are usually the first targets for modification to remote, adaptive operation, and a basic understanding of how Figure 7-3 functions is essential to proceding to adapting such equipment.

Before getting into how to adapt your devices to remote operation, though, you will need to understand what happens if

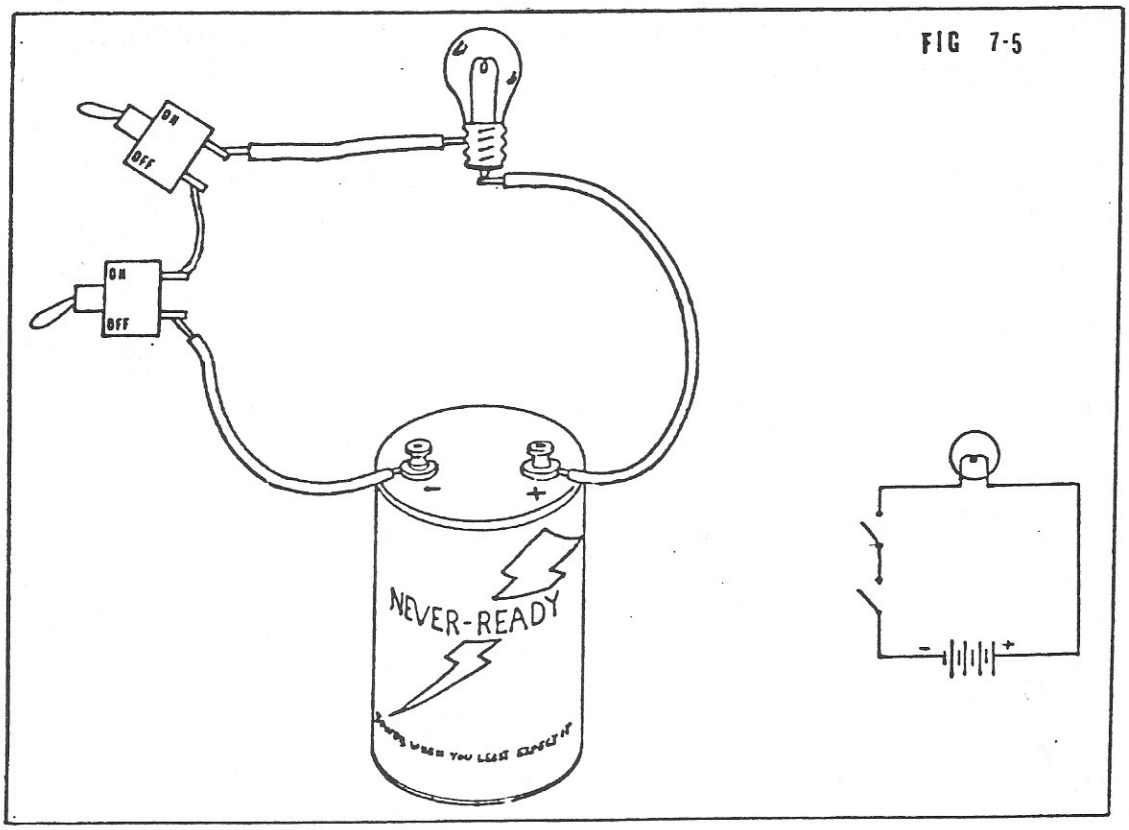

we add a second switch to our circuit.

Notice in the drawing in Figure 7-6, that when two switches are in **series** in the same circuit, the circuit is broken when <u>either one</u> is open (off), so that no current can flow, and the load will not operate. Both switches must be closed (on) in order that the device can function.

Modification of a battery operated toy so that a handicapped child may operate it with a remote switch is fairly simple, then.

WARNING - THE TECHNIQUES DESCRIBED HEREIN ARE VALID ONLY FOR LOW VOLTAGE, BATTERY OPERATED CIRCUITS. WIRING OF 110 VOLT A.C. (HOUSE OUTLET VOLTAGE) SHOULD ONLY BE DONE BY A QUALIFIED ELECTRICIAN. 110 VOLT A.C. CAN PRODUCE A LETHAL SHOCK!

By going into the toy, cutting a conductor (wire) anywhere in the circuit, and running the two wires out through a hole in the toy to a specialty switch, the child can operate the toy, remotely as long as the toys' built-in switch is closed (on).

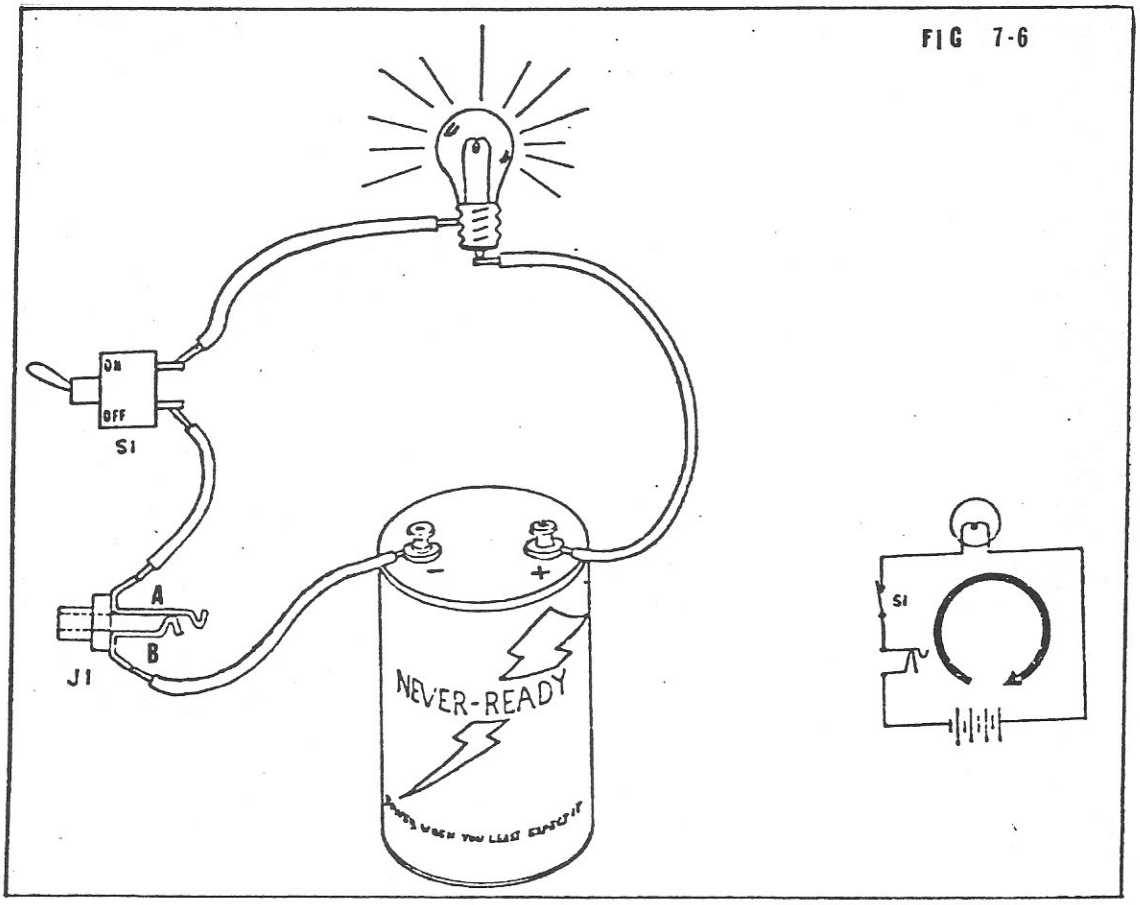

There are two major disadvantages to this approach, however. First, every toy or device to be modified would need its own specialty switch, which, if a number of devices were to be made available to the child, might involve a substantial investment in time and money, just to construct a batch of switches. Second, every toy modified would be unavailable to other children because it has been specifically adapted to one child.

The answer lies in a component called a **closed circuit jack.**

WARNING - THE TECHNIQUES DESCRIBED HEREIN ARE VALID ONLY FOR LOW VOLTAGE, BATTERY OPERATED CIRCUITS. WIRING OF 110 VOLT A.C. (HOUSE OUTLET VOLTAGE) SHOULD ONLY BE DONE BY A QUALIFIED ELECTRICIAN. 110 VOLT A.C. CAN PRODUCE A LETHAL SHOCK!

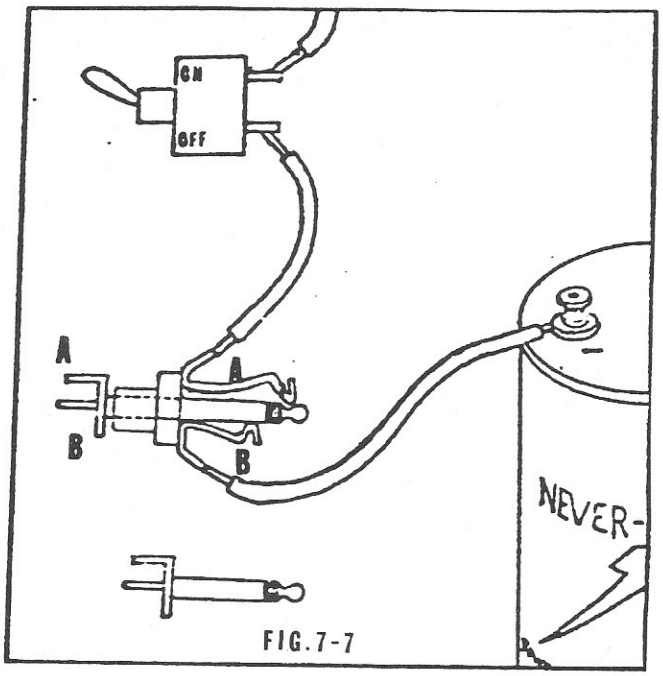

FIG.7-7

As shown in Figure 7-7, a closed circuit jack is a kind of **connector** that acts as a switch, i.e., when no plug is inserted in it, it closes, and completes the circuit. Thus, with nothing plugged into the jack, the device operates exactly as it did before it was modified. This overcomes the objection of not being able to use the device normally after modification. At the same time, inserting a plug into the jack will break the current flow through the device, and stop it. If a specialty switch is wired to the correct terminations of the plug (A & B), however, the specialty switch will operate the device remotely, as long as the original switch installed in the device is on. Figure 7-7 shows how the plug breaks the circuit when inserted.

Figure 7-8 shows our lamp circuit completely modified. Notice that the specialty switch can now be inserted into the jack, the device used, the specialty switch unplugged, and then used <u>with any other device similarly modified</u>. This is an enormous advantage in that any specialty switch with a plug on it (we standardized on a 1/8" miniature size) will operate any device modified with an appropriate jack . In an institutional setting, each client can have a switch designed for him or her, and it will operate any entertainment, therapy, or measurement device that has been adapted to have a jack, giving universal flexibility. In a home setting, parents of handicapped children

WARNING - THE TECHNIQUES DESCRIBED HEREIN ARE VALID ONLY FOR LOW VOLTAGE, BATTERY OPERATED CIRCUITS. WIRING OF 110 VOLT A.C. (HOUSE OUTLET VOLTAGE) SHOULD ONLY BE DONE BY A QUALIFIED ELECTRICIAN. 110 VOLT A.C. CAN PRODUCE A LETHAL SHOCK!

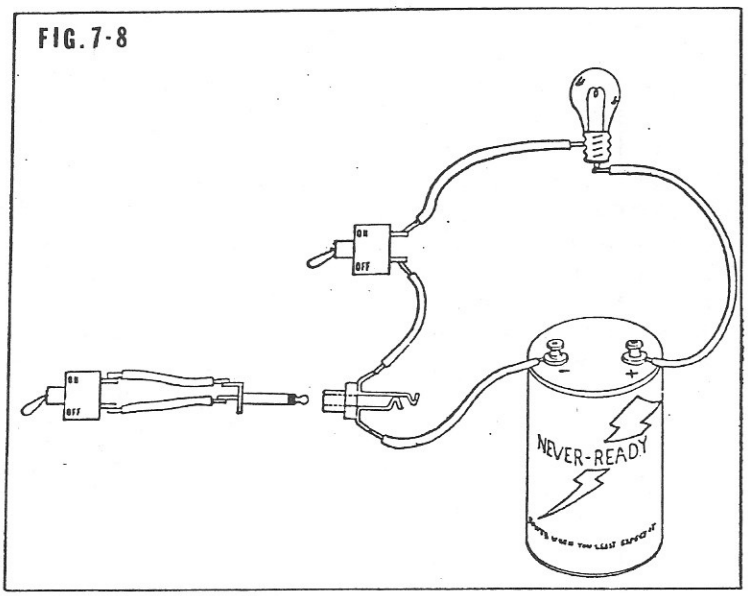

can swap or loan modified toys to give their youngsters variety.

When the child outgrows his interest in a specific toy, the modified toys can be passed on to other handicapped children.

Jacks and plugs come in 1/16", 3/32", 1/8" and 1/4" varieties. Our selection of the 1/8" size to be our standard was based upon the facts that they are universally available, are small enough to be installed in small toys, and easy to wire. Figure 7-9 shows the plug and jack in more detail, including the short jumper wire which must be installed on some models.

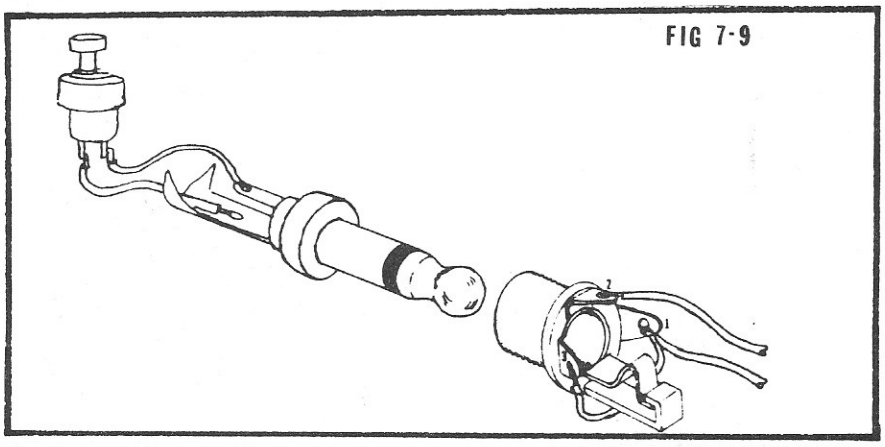

WARNING - THE TECHNIQUES DESCRIBED HEREIN ARE VALID ONLY FOR LOW VOLTAGE, BATTERY OPERATED CIRCUITS. WIRING OF 110 VOLT A.C. (HOUSE OUTLET VOLTAGE) SHOULD ONLY BE DONE BY A QUALIFIED ELECTRICIAN. 110 VOLT A.C. CAN PRODUCE A LETHAL SHOCK!

CHAPTER VIII

MEET THE COMPONENTS

As stated previously, it is not the intent of this book to attempt to teach electrical engineering, nor are the authors qualified in the least to do so. You will, however, be working on the fringes of this most fascinating discipline, and will need to have at least a passing acquaintence with some of the components that are typically used in Electronics Assemblies.

Even if your location is so remote that no electrical engineer can be part of the team, you can use designs that have been done and proven elsewhere. You can make the circuit boards, buy the components, assemble and wire the job, and then enjoy the use of the design.

In buying the components, most electronics supply stores and all mail-order houses will be glad to simply fill a bag from the "shopping list" you give them. Still, it is well to know enough about them to identify them once you have them home, and, of course, it is always possible to get them mixed up once they are spread on the table for a construction session.

Even before your team begins to think in terms of construction sessions, don't be afraid to drop into your local Radio Shack (or equivilent), armed with this chapter, and browse through the goodies, correlating what you see here with what appears hanging on the walls in blister packs. You'll walk out with a new appreciation of what the components look like and some of the mystique will fade.

Let's take a look at some of the things you'll find:

<u>RESISTORS</u> - Resistors are the most common type of electronic component. As the name implies, they resist the flow of electricity. All things have a resistance to the passage of electrical energy, even conductors like wire, but resistors place a predetermined amount of resistance in their circuits. This resistance is measured in **ohms.** (Ω) They are rated in three ways; first, the resistance value, second the tolerance as an allowable deviation percentage from the nominal resistance, and finally, in wattage, the ability of a given resistor to dissipate energy as heat. Most are small carbon units,

usually for dissipation of 2 watts or less, or in wire wound styles for higher power applications. The carbon types usually found in adaptive equipment are color coded to make them easy to identify. The chart below, including the slightly risque mnemonic electrical engineers use to learn and remember the code, will make it easier for the neophyte to figure out what the little devil dropped on the floor really is. (SIG FIG is short for Significant Figure)
(MULTIPLIER is the number of zeros that follow the first and second significant figures)

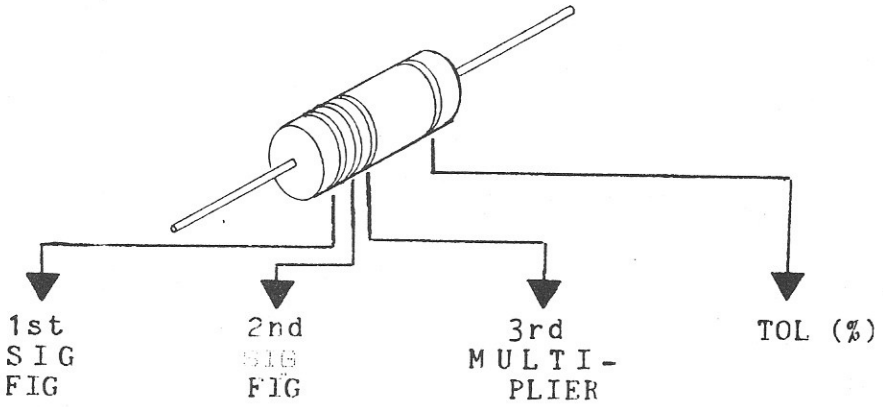

VALUES

COLOR	MNEMONIC	NUMBER
BLACK	BAD	0
BROWN	BOYS	1
RED	RAPE	2
ORANGE	OUR	3
YELLOW	YOUNG	4
GREEN	GIRLS	5
BLUE	BUT	6
VIOLET	VIOLET	7
GREY	GIVES	8
WHITE	WILLINGLY	9

COLOR	TOL
GOLD	5 %
SILVER	10 %
(none)	20 %

There is a convenience that has been adopted in referring to resistors to keep the value easy to say, since many are of very high resistance values. The letter "k" (for kilohm)is often used to indicate "thousand" and the letter "m" or the abbreviation "meg" (for megohm) is often used to denote "million".

Some examples, then, of how to read resistors would be:

1. red,red,orange,silver = 22,000Ω or 22K (10%)

2. brown, black, black, gold = 10Ω (5%)

3. orange, blue, red, gold = 3,600Ω or 3.6K (5%)

4. brown, green, green = 1,500,000Ω or 1.5M (20%)

Resistors also come in a variable variety, called potentiometers or (oddly enough) variable resistors. The most common use is for the volume control on radios and TV's. Although they are not color coded, they too are measured in ohms, and wattage, although, due to their variable nature, tolerance usually has little meaning.

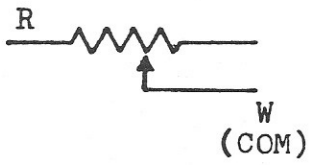

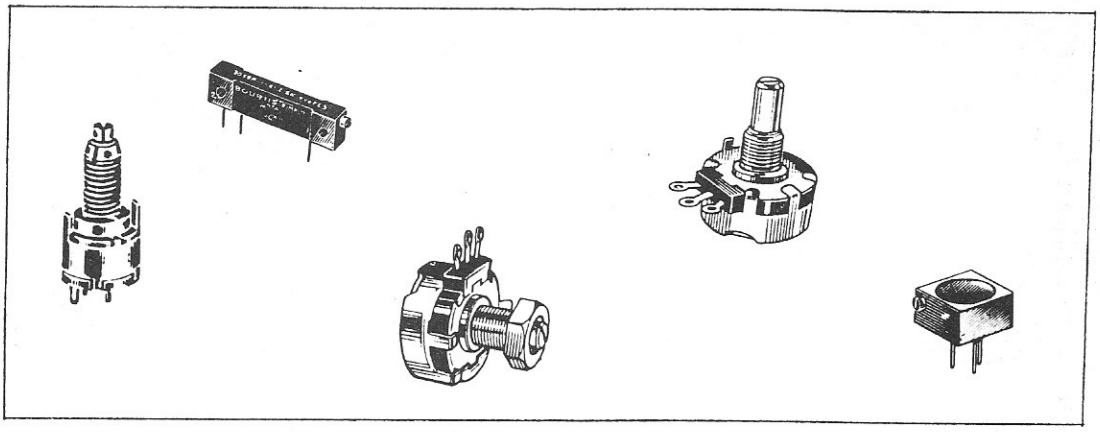

<u>CAPACITORS</u> - Capacitors are small, momentary electrical storeage devices. The most common application for the average person is in the electrical system of the family car and is usually referred to by its now obsolete name of "condenser". The function of capacitors is to pass AC (Alternating Current) while blocking the passage of DC (Direct Current).

The unit by which the value of capacitors is measured is the "farad", although the farad is such a huge amount of capacity, the common term is the microfarad (μ f) or "mfd",and picofarad, an even smaller measure is used from time to time. Some capacitors are polarized, meaning that they must go in the circuit only one way. The polarization is indicated by adding a (+) sign to one end or a (-) sign or the word "NEG" to the other. Our schematic symbols here, show a normal and a polarized

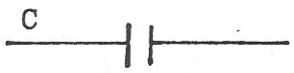

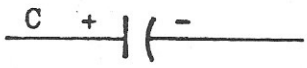

capacitor. The reference designator for capacitors is "C".

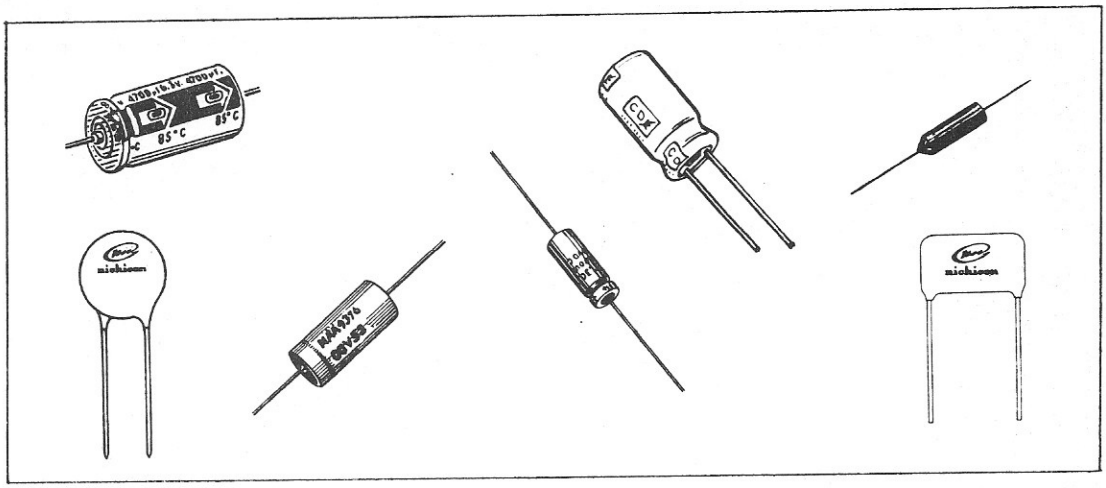

DIODES - Diodes, transistors and microcircuits fall into a general category of **semiconductors.** Diodes function in a circuit by conducting current in only one direction. The schematic symbol for a diode looks like a side view of an arrow hitting a target. All diodes are polarized. The arrow head is called the **Anode** and the target is called the **Cathode.** In a brilliant stroke of illogic, the current flows in the opposite direction to the arrow, to the confusion of first year electrical students everywhere. On small diodes, the Cathode is usually denoted by a colored band or dot.

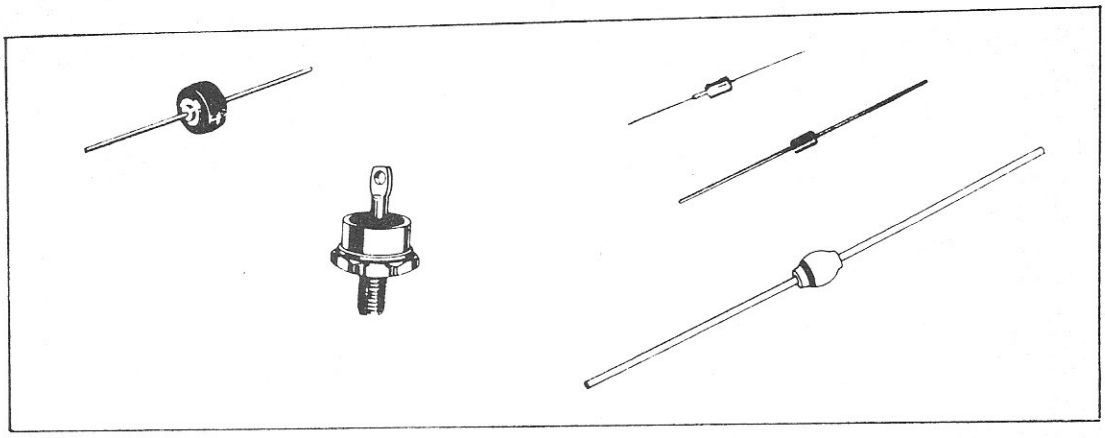

LIGHT EMITTING DIODES - LED's are a special type of diode that acts as a low power lamp. They come in red, yellow and green, and are typically used in battery operated gear because of their low power consumption. They also last almost forever. Where an ind-

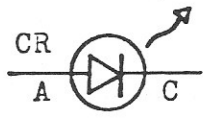

icator light is needed on equipment for the handicapped, the fact that they do not get hot while lit, nor do they break like a lamp are positive advantages.

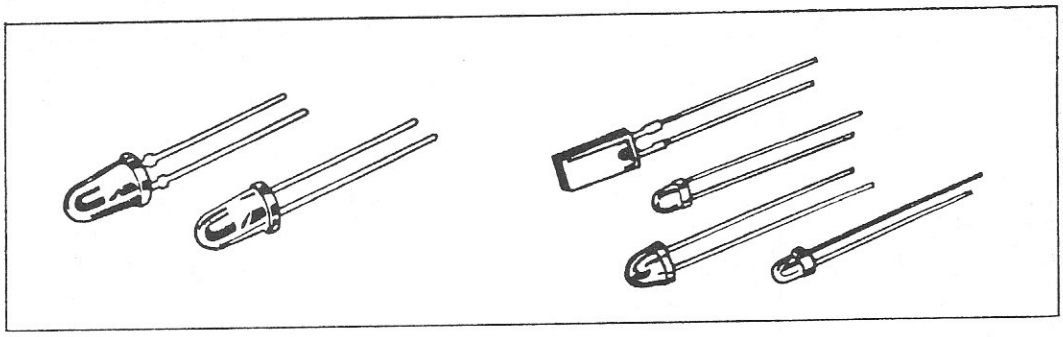

TRANSISTORS - The invention of the transistor led to the explosion of cheap, versitile electronics equipment available today. Transistors come in two varieties, called PNP and NPN. In the PNP variety, the little arrow points **into** the device and in the NPN, it points **out** of the device. The transistor is a three legged device, the three legs being called **Base, Emitter and Collector.** It is extremely important, when inserting a transistor into a circuit, to make sure you get the leads sorted out correctly, or the transistor will not survive the first application of power to the circuit. The great value of transistors is that they can switch circuits on and off depending on the voltage applied to the base.

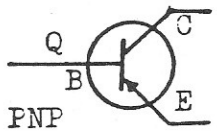

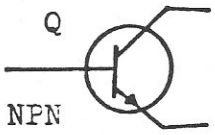

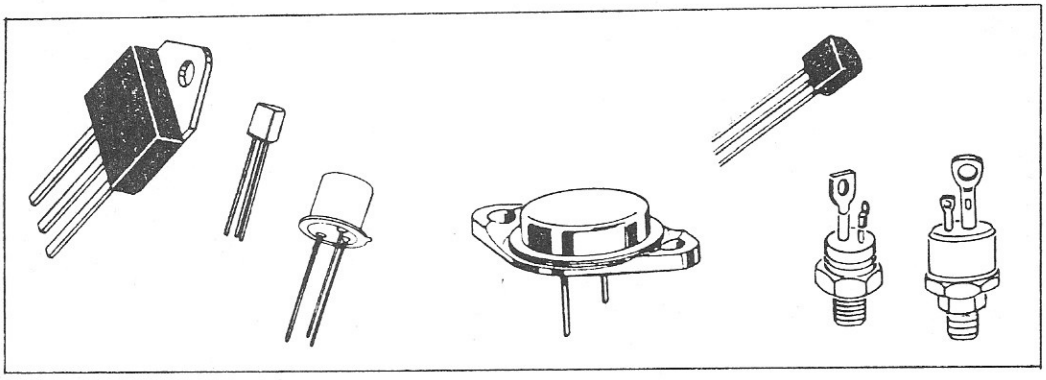

MICROCIRCUITS - Microcircuits (μcir), also known as Integrated Circuits (ICs) or somewhat incorrectly as "chips", are the end product of an industry devoted to packaging an enormous amount of circuitry into a small volume. An IC on todays market may contain hundreds of transistors, diodes,

resistors and capacitors in a part smaller than a postage stamp. They are really the marvel of present day technology. It is even more amazing that the industry has the cost of such devices driven down to the point where many of the most common and useful are around a dollar apiece! Like transistors, it is very important to get the connections just right in planning your circuit boards, because they are unforgiving if connected wrong.

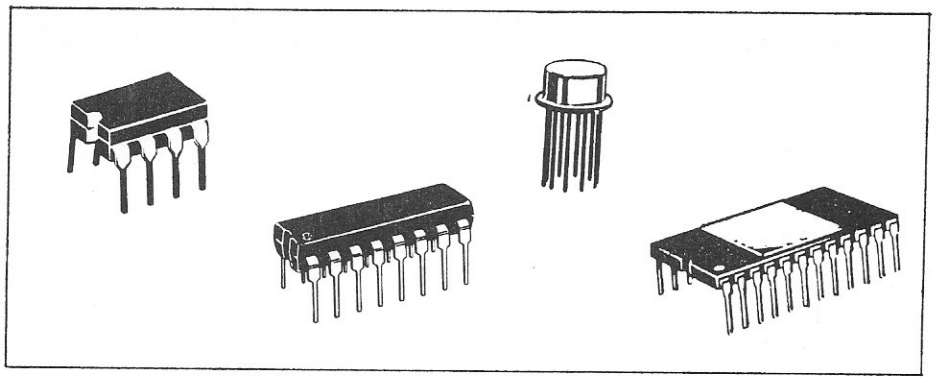

NOTE - ALL SEMICONDUCTORS ARE HEAT SENSITIVE. SOLDERING MUST BE QUICK AND SURE. EXCESSIVE DWELLING ON A SEMI-CONDUCTOR WITH A SOLDERING IRON IS SURE DEATH TO THE COMPONENT.

LAMPS - Lamps or incandescent light bulbs are designated by the reference designator "I". Except that they come in smaller sizes and in many different voltage ratings, they are generally identical to the common, household light bulb.

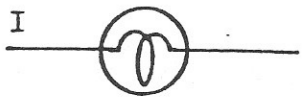

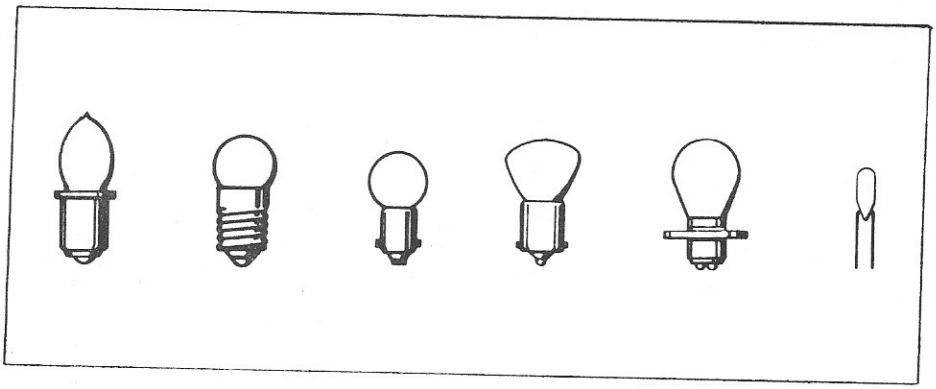

SWITCHES - At the right is the schematic symbol for a simple on-off switch. Its technical description is a "Single Pole, Single Throw" switch because it opens (breaks) or closes (makes) a single conductor. In common with all switches, its reference designator is "S".

This is the symbol for a Single Pole, Double Throw switch. It switches a single conductor between two other conductors. Such a switch may have a dead position between the other two and would be called a SPDT **center-off** switch.

This symbol represents a Double Pole, Double Throw Switch. It switches two conductors between four conductors and may be thought of as two SPDT switches ganged together so they are operated as one. The dotted line shows the mechanical link between the sections.

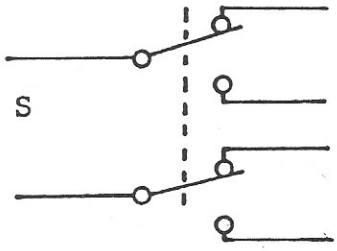

These devices, shown at the right are push buttons. The first is normally open and makes the circuit when pushed, and the second is normally closed, and breaks the circuit when pushed.

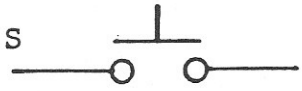

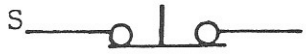

The schematic symbol on the right represents a rotary switch, the most common application of which is a television channel selector. The wiper (common contact) sweeps around and any of the other contacts may be selected. This switch is a single pole, twelve position, but many combinations are available.

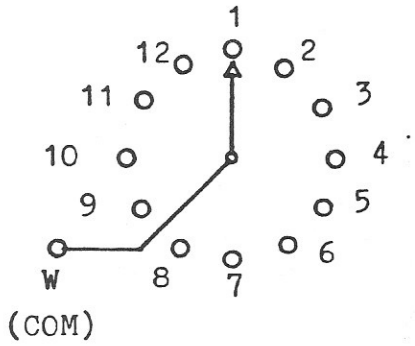

The **relay** is a very specialized switch, which is operated by an electromagnetic field. This is a very handy arrangement because we can build a circuit like a timer, for example, which will operate the relays' switch contacts. Relays are also useful in isolating a disabled person from higher voltages, say in an application in which it is desired to switch 110 VAC with the contacts, but let the patient energize the low voltage coil of the relay with battery voltage.

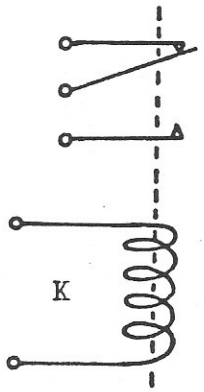

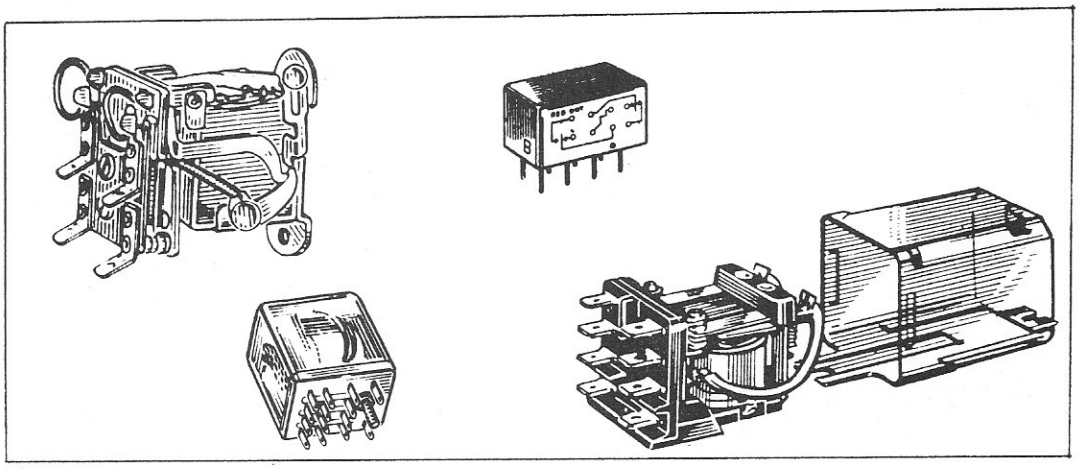

<u>MAGNETIC DEVICES</u> - The Inductor (choke) is a device used to store, momentarily, the energy in its leg of a circuit. Inductors are used commonly in power supply filters and in tuned circuits. Vertical lines adjacent to the coils would indicate that the coil is wound around an iron core.

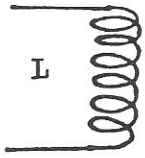

This magnetic device is a Transformer. A transformer changes voltage applied to its primary (left) winding into a different voltage on its secondary (right) windings. A transformer may have more than one secondary, and the level of voltage may be scaled up or down. A typical application is the transformer which converts 110 VAC house voltage down to 6-8 VAC to run your doorbell.

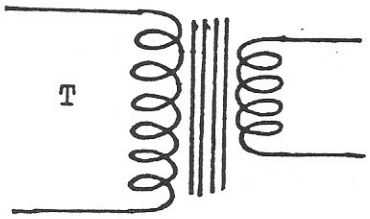

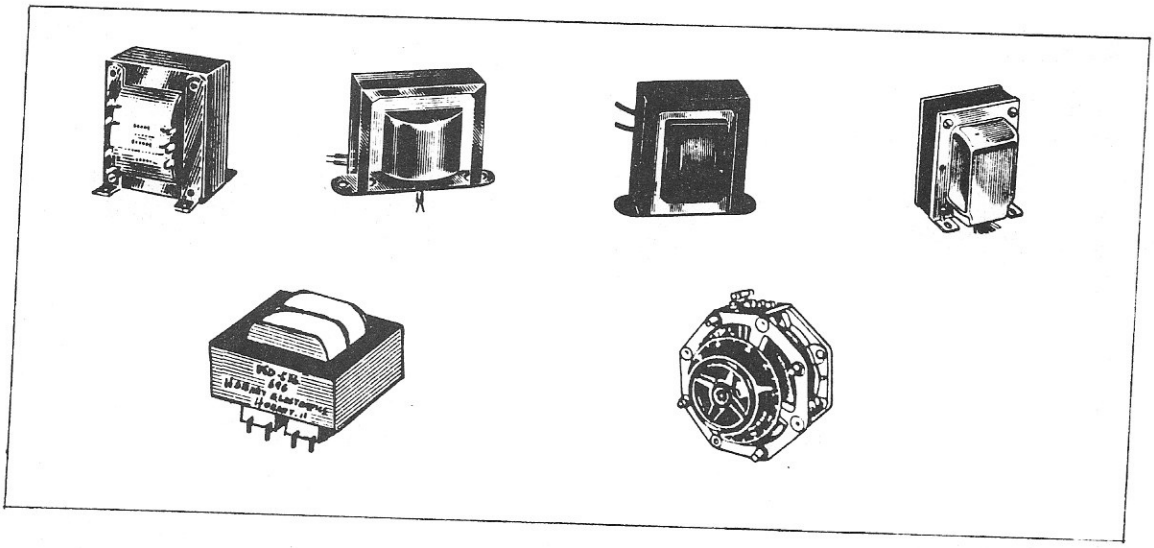

CHAPTER IX

AN INTRODUCTION TO WIRING AND SOLDERING

Soldering is a process of joining two metals together using heat and a third (low melting point) metal - **solder** - as a filler metal.

Soldering, although normally thought of in terms of modern electrical and electronic assembly, is actually a very ancient art. Metal urns with soldered handles and decorations have been found in cultures predating the pyramids. Stained glass windows from medieval and Rennaisance Europe were made by soldering the metal divider strips together to hold the glass in place. Brass and copper tools and utensils have been of soldered construction almost since the discovery of those metals, and even today, most buildings have plumbing fashioned out of soldered pipe and fittings.

In electronics work, electrical connections of wires and components are normally made with solder. A good soldered connection is generally considered to be the best of all electrical connections. Solder is usually a mixture of two or more metals, the kinds of metals and proportions of the mixture being selected for the characteristics desired in the final solder joint. The solder used in industrial electrical work is most commonly a mixture of tin and lead in the proportions of 60% tin and 40% lead, and this type of solder is referred to as 60/40 solder. For all the projects discussed in this book, this is the solder referred to when we talk about soldering.

Despite the fact that exotic applications of electronics such as deep sea or Aerospace equipment have super rigid and complex standards for soldered connections, soldering for normal applications such as home appliances and adaptive equipment like yours is a very simple process. In commercial industries, it is common to teach soldering to new, inexperienced employees in under an hour. We will go into only enough theory to give you the level of understanding you need to become both competent and confident about soldering.

To join two metals together, such as the wire and terminal shown in Figure 9-1, only a few basic steps are required:

WARNING - THE TECHNIQUES DESCRIBED HEREIN ARE INTENDED AND VALID ONLY FOR LOW VOLTAGE, BATTERY OPERATED CIRCUITS. WIRING OF 110 VOLT A.C. (HOUSE OUTLET VOLTAGE) SHOULD ONLY BE DONE BY A QUALIFIED ELECTRICIAN. 110 VOLT A.C. LINE VOLTAGE CAN PRODUCE A LETHAL SHOCK!

(1) the connection must be mechanically secure before soldering

(2) the metals must be cleaned

(3) the metals must be heated to a temperature where they will melt the solder and,

(4) the solder must be applied to the parts of the connection, and not to the source of the heat.

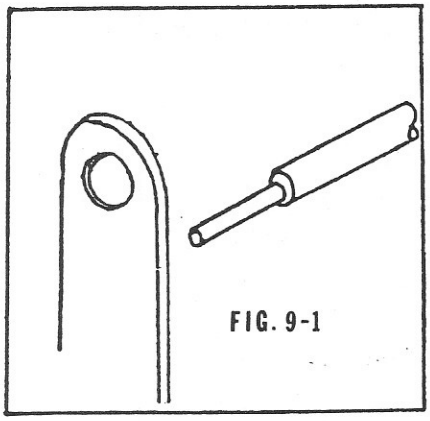

FIG. 9-1

Only simple tools are required for wiring - needle nosed pliers for wrapping of wires, a stripper for stripping the plastic insulation from wires, wire cutters (although in a pinch, some strippers can be used for cutting wires too) and a **soldering** iron.

The soldering iron is simply a heat source for heating the connection prior to soldering. A typical soldering iron, as shown in Figure 9-2, consists of a handle and cordset for getting power into the tool, a heating element for converting the electricity into heat, and a tip for storing the heat until it is needed and then transfering it to the work.

FIG. 9—2

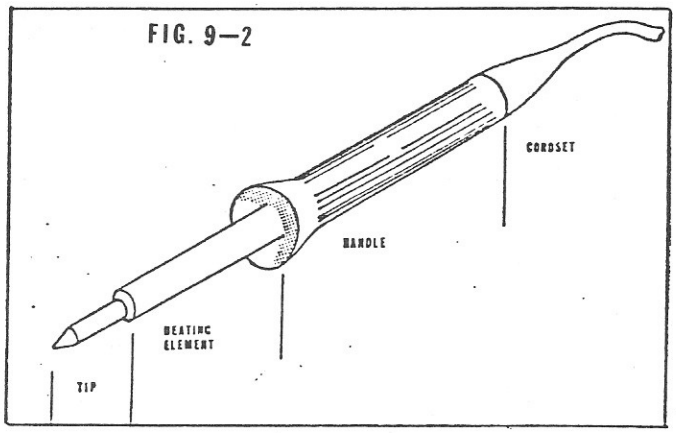

WARNING - THE TECHNIQUES DESCRIBED HEREIN ARE INTENDED AND VALID ONLY FOR LOW VOLTAGE, BATTERY OPERATED CIRCUITS. WIRING OF 110 VOLT A.C. (HOUSE OUTLET VOLTAGE) SHOULD ONLY BE DONE BY A QUALIFIED ELECTRICIAN. 110 VOLT A.C. LINE VOLTAGE CAN PRODUCE A LETHAL SHOCK!

The most common problem associated with soldering irons is the failure to keep the tip of the iron clean and free of oxidation. Being at perpetually high temperatures, the soldering iron tip will oxidize rapidly, as evidenced by a bluish or straw colored cast to the tip which will progress to form a black, flakey crust. This oxide layer is a thermal insulator and will prevent to a substantial degree the free flow of heat from the tip to the work.

Oxidation can be minimized by **tinning** the tip. Tinning is keeping the tip coated with fresh solder at all times. Prior to every solder joint attempted, the tip should be cleaned by wiping it quickly and lightly on a slightly damp cloth or cellulose sponge, and applying a little solder to it. The solder that is applied to the tip has a twofold job. First, it will cover the tip and prevent air from getting to the tip itself, thus preventing oxidation of the tip, and second, it will provide a "wet" path between the iron tip and the work, thus providing better transfer of heat from the iron to the work.

To make a soldered connection, then, the wire must first be made mechanically secure to the terminal before soldering. See Figure 9-3. This is usually done by wrapping the wire tightly to the terminal. Since most wire is made up of many strands of small wire, a better and easier connection is made if the portion of the stranded wire to be wrapped on the terminal is first stripped of its insulation and then tinned. Tinning of stranded wire involves cleaning the iron as described above, tinning the tip, touching the tip to the wore until it is hot, and then melting a bit of solder onto the wire strands. The solder will flow through the strands and fuse them into a solid strand which will be capable of being wrapped without fraying out.

FIG. 9—3

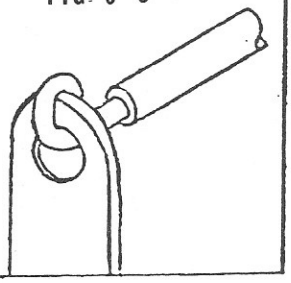

Now, with a firmly wrapped connection, we have satisfied the first basic requirement that the connection must be mechanically secure before soldering.

Our second requirement was that the metals to be soldered must be cleaned before soldering. Fortunately, this cleaning of the oxides that normally form on all metals is accomplished

WARNING - THE TECHNIQUES DESCRIBED HEREIN ARE INTENDED AND VALID ONLY FOR LOW VOLTAGE, BATTERY OPERATED CIRCUITS. WIRING OF 110 VOLT A.C. (HOUSE OUTLET VOLTAGE) SHOULD ONLY BE DONE BY A QUALIFIED ELECTRICIAN. 110 VOLT A.C. LINE VOLTAGE CAN PRODUCE A LETHAL SHOCK!

almost automatically. The cleaning agent is a material called **flux.** Flux is a liquid chemical material which, in the presence of heat, activates, spreads on hot surfaces, and dissolves oxides. Since it covers the metals in the process, it prevents air from coming into contact with the cleaned surfaces and reoxidizing them until soldering is accomplished. The neat part about flux is that if the solder you buy is a type called "Rosin Core Solder", the solder is hollow and the flux is inside. This means that every time the solder is used, a small amount of flux is released into the soldering area and cleaning is automatic! Liquid fluxes are available that can be applied with a cotton swab, but the flux in rosin core solder is usually enough for any rational soldering problem. Whether liquid or core flux is used, you must remember that the cleaning action of flux is absolutely essential to getting a good solder joint.

In the actual making of a solder joint, our third requirement is that the connection itself must be hot enough to melt the solder. This is necessary because both metals of the connection, in our case the wire and the terminal, need to be above the melting point of solder in order for a good solder joint to form. Solder cannot spread on and fuse to cold metal. Figure 9-4 shows a cleaned, tinned iron being applied to one side of a connection, and heat (indicated by shading) flowing into the connection.

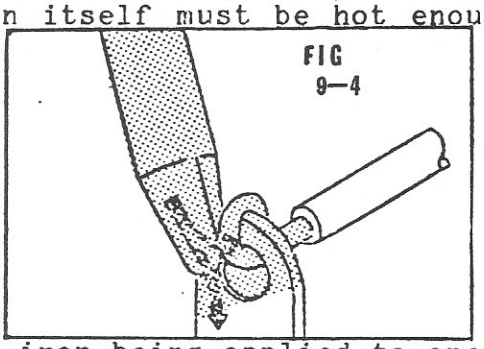

When the connection has been heated, normally taking a second or two, and the iron is still on the connection, we can fulfill the fourth and last requirement - making the connection itself melt the solder. The purpose of making the connection itself melt the solder is really a failsafe mechanism to insure ourselves that the connection is hot enough. The iron itself must never melt the solder of the connection. Figure 9-5 shows that the solder is applied to the far side of the connection from where the heat is being applied.

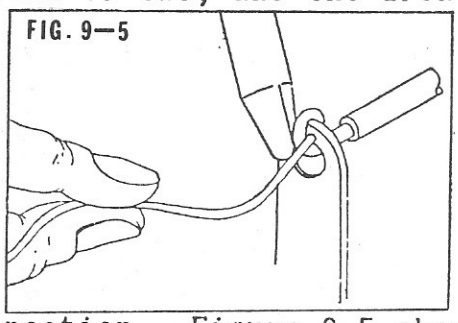

WARNING - THE TECHNIQUES DESCRIBED HEREIN ARE INTENDED AND VALID ONLY FOR LOW VOLTAGE, BATTERY OPERATED CIRCUITS. WIRING OF 110 VOLT A.C. (HOUSE OUTLET VOLTAGE) SHOULD ONLY BE DONE BY A QUALIFIED ELECTRICIAN. 110 VOLT A.C. LINE VOLTAGE CAN PRODUCE A LETHAL SHOCK!

When the solder flows through the connection, a good solder joint will occur. After the solder has flowed through the joint area, remove the iron and allow the joint to cool naturally. It is important not to allow the solder joint to move or be jiggled during this cooling phase. As soon as the solder has solidified, the solderjoint is done. After a little practice, a simple solder joint such as this will take only five or six seconds to make, but each and every one should be inspected for these characteristics: See Figure 9-6.

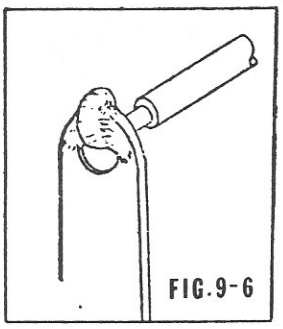
FIG.9-6

(1) the connection should be bright and shiny

(2) there should be enough solder for the solder to form fillets between the metals.

(3) there should not be so much solder that the connection is buried in a blob of solder, and

(4) the connection should show the signs of good **wetting action.** (see below)

Wetting action is the <u>single most important</u> characteristic of a solder joint. Wetting is the extent to which the solder has penetrated the metals and formed a sound solder joint. Good wetting can be judged by its similarity to water absorbed into a blotter, whereas poor wetting is more like water that "beads up" on a freshly waxed car. Figure 9-7 shows this analogy in a section view. Notice the feathered out edge to the good wetting and the beaded, or rolled under edge of the poor wetting.

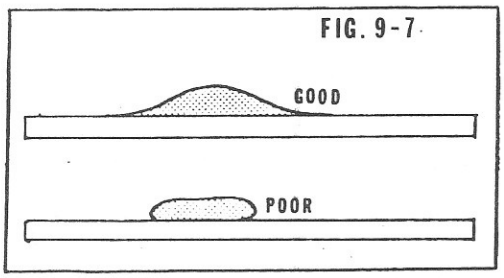

FIG. 9-7

WARNING - THE TECHNIQUES DESCRIBED HEREIN ARE INTENDED AND VALID ONLY FOR LOW VOLTAGE, BATTERY OPERATED CIRCUITS. WIRING OF 110 VOLT A.C. (HOUSE OUTLET VOLTAGE) SHOULD ONLY BE DONE BY A QUALIFIED ELECTRICIAN. 110 VOLT A.C. LINE VOLTAGE CAN PRODUCE A LETHAL SHOCK!

All soldering is basically the same. As each new type of connection is encountered, you will be able to apply these basic principles and techniques to it. Each solder joint will have at least two metals to be soldered together. Each solder joint will need to be mechanically secure before soldering. Each will need to be cleaned with flux as soldering is done. Each will need to have its parts heated above the melting point of solder.

These are the basics of soldering; a clean iron, a little practice, and you will have learned a valuable skill for adaptive equipment manufacture.

WARNING - THE TECHNIQUES DESCRIBED HEREIN ARE INTENDED AND VALID ONLY FOR LOW VOLTAGE, BATTERY OPERATED CIRCUITS. WIRING OF 110 VOLT A.C. (HOUSE OUTLET VOLTAGE) SHOULD ONLY BE DONE BY A QUALIFIED ELECTRICIAN. 110 VOLT A.C. LINE VOLTAGE CAN PRODUCE A LETHAL SHOCK!

CHAPTER X

MAKING YOUR OWN PRINTED CIRCUIT BOARDS

Building electronic circuits can be a time-consuming task when the connections within the circuit have to be wired in by hand. Building a circuit with many fine wires requires a great deal of experience before speed and accuracy are attained. Mistakes, inevitable in complex wiring can be difficult to find and correct, and if not found and corrected, can cause the device not to operate or, worse, self-destruct. For the beginner and the experienced professional alike, the answer to speed and accuracy is the printed circuit board.

The printed circuit board is a plastic sheet coated with copper, in which some of the copper is removed, leaving a pattern of copper "tracks" or "runs" which will serve the same function as wires. One will see equipment which is constructed from a perforated board, in which the components are inserted and then wired together with many fine wires. The wired board may take many hours to assemble and wire, while the printed circuit board will take only minutes.

While the perforated board / wires approach may have a place in the lab, a quick look at such a "perf-board" and a feeling for the labor involved in making one will convince most people that printed circuitry has advantages that make the process worth some trouble to learn and the resources worth going after.

In actual fact there are three different processes by which the average person can produce printed circuit boards, each with its own advantages and disadvantages. Each will be discussed in some detail and each equipment team will have to decide which is best for its own purposes but each process starts with a layout of what the finished board should look like. Let's get the design of the layout out of the way first, and then get into the board making processes.

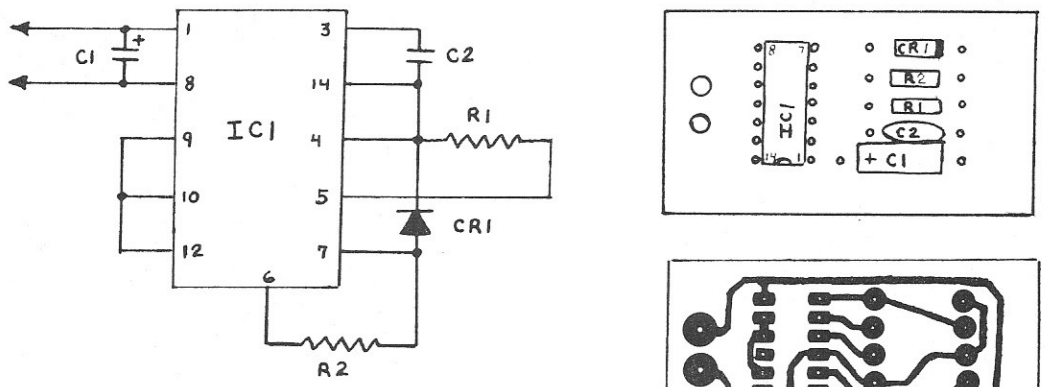

FIGURE 10-1

In Figure 10-1 an example of a small schematic diagram is shown on the left. While this schematic is for demonstration only, its size and complexity are typical of many of the small circuits you will want to build. A full sized layout of the top (**component**) side of the board is shown at the upper right, and a view of the far side (**circuit** or **foil side**) at the lower right. The circuit consists of several small components (two resistors, two capacitors and a diode) around a small 14 pin microcircuit. The first step in designing a printed circuit board for this circuit is to procure the parts on an accompanying parts list and lay them out on the table, identified with their reference designators (i.e., R1, CR1, C2, etc.) so that the size and shape of each is apparent. See Figure 10-2.

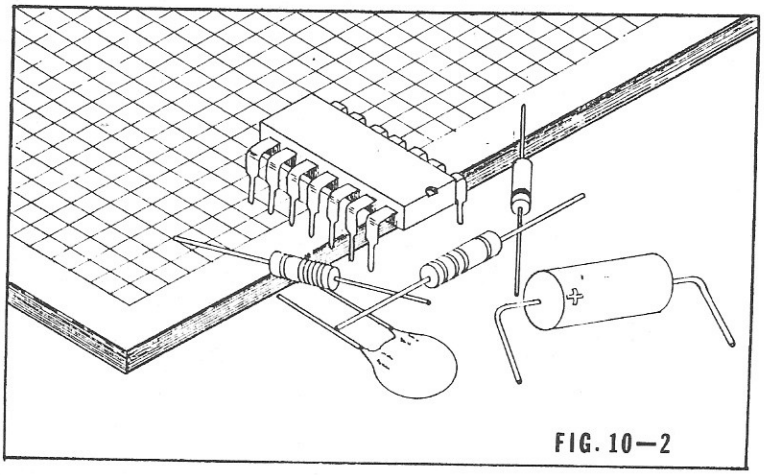

FIG. 10—2

On fine graph paper, (10 divisions to the inch is best, because many components have lead spacings to this grid) pencil in the outline of the board size desired, the size and shape to fit in a small equipment box, for example. Then, again in pencil, begin laying out the parts, to scale size, the way they will lay on the board. For most of our applications, parts placement is in no way critical, but when it comes time to make the electrical connections, since there is no way to make the circuit runs "cross over" one another, it may become desirable to move components around, hence lightly in pencil makes it easier to shuffle things for the best layout. Your final efforts should look something like the upper right hand corner of Figure 10-1.

Once the parts layout is complete, start connecting the various parts of the circuit with light pencil runs. These will eventually become the copper runs or tracks which will carry the electrical signals which will make the circuit work, and each run will be the equivilent of a wire. Make sure that none of the runs cross or a "short circuit" will occur and the circuit will not function and some of the parts may be damaged. The layout of a printed circuit board can be a fun process, and if someone in the group likes puzzles and mazes, he or she might be a natural for this phase. When the circuit board designer gets into a corner and can't make a connection because of other runs

being in the way, start moving the parts around on the layout until the desired area is "opened up". This is the reason to do everything in pencil first! When the designer is satisfied that all the connections are in and correct, and it looks sort of like the lower right hand corner of Figure 10-1, it is a good idea to have a second person check the layout against the schematic and parts list. It is amazing how easily a seemingly insignificant error can creep into a layout without being noticed by the designer who may literally be too close to the forest to see the trees!

When both designer and checker are satisfied that the circuit board layout is correct, the design is ready to be committed to artwork and a fabrication process.

There are basically three different processes which will turn the layouts you have made into printed circuit boards; the Direct Etch Process, the Ruby Film Process, and the Taped Positive Process. Each has its faults and good points, and each equipment team should become familiar enough with each to select the process most suitable for local needs and resources.

<u>THE DIRECT ETCH PROCESS</u> The Direct Etch Process involves drawing the desired circuitry directly on each circuit board with a special "Resist Pen" and etching off the remainder of the copper. It is the simplest process, and can be done completely at home, but is not repeatable. Boards done by this process are therefore not easily clonable nor can they be readily transferred from one equipment team to another. In essence, the direct etch process is most useful when only one or two boards of a given kind are ever expected to be needed.

The direct etch process is, however, easily done at home with relatively safe chemicals and almost nothing needed in the way of facilities. A good Pyrex dish, large enough to accept the largest board desired is about the only "investment" needed. The best way for an equipment team to start is to purchase a direct etch kit, such as Radio Shack's #276-1576. One of these kits will have virtually everything needed to start you on the road to producing printed circuit boards.

The process that produces direct etch printed circuit boards goes as follows:

FIGURE 10-3 A: Clean a piece of printed board material, previously cut to size, by scrubbing the copper vigorously with a paste of kitchen cleanser and water. Rinse the cleaned board in warm water until it is completely free of cleanser residue and pat dry with a lint free paper towel. It is important that the copper not be touched from now until the process is complete.

FIGURE 10-3 B: Using your scale layout as a guide, rub pads on the board in locations desired using a rub-on, dry transfer pad such as Radio Shack #276-1577 or Datak #ER13.

After etching, the copper under these pads will be the soldering pads for the component leads which will eventually come through from the other (component) side of the board. Follow the dry transfer manufacturers' directions.

FIGURE 10-3 C: Using a special Resist Pen, such as those available in electronic supply stores, draw the circuit run pattern from your layout onto the board. It is important to make the runs dense and black. Do a second coat after the first is dry if there is any question about complete coverage.

FIGURE 10-3 D: The copper not covered by dry transfer pads or resist may now be etched off. Read and <u>thoroughly understand</u> the etching instructions of the manufacturer of the direct etch kit you purchased. While these consumer-oriented etch kits are generally safe to use, the manufacturers instructions and cautions should be observed strictly, and normal safety precautions taken; i.e., no children around the chemicals, a pan of clean water available to quickly rinse the eyes in the event of a splash, good ventilation, and proper disposal or storeage.

FIGURE 10-3 E: After the etching of the copper is complete, clean the resist off the board using a paste of cleanser or some fine steel wool. A copper pattern, exactly like the resist pattern should emerge. Some kits, such as the Radio Shack kit referred to above, supply a resist solvent to remove the resist pen marks after etching.

FIGURE 10-3 F: The board is now ready to be drilled. If the dry transfer pads you used had a small "hole" in the center, your board already has a small depression etched in the center of each pad in which to locate a drill. If not, LIGHTLY center punch each pad. Drill a hole for the component lead in each pad. Your circuit board is now complete and ready for assembly and soldering.

Since copper tarnishes rapidly, (and tarnish is bad for soldering) the board should be used soon, or stored in a plastic bag until needed. Never store the board with paper, as the sulphur in paper will cause a tarnish that is very difficult to remove.

FIGURE 10-3

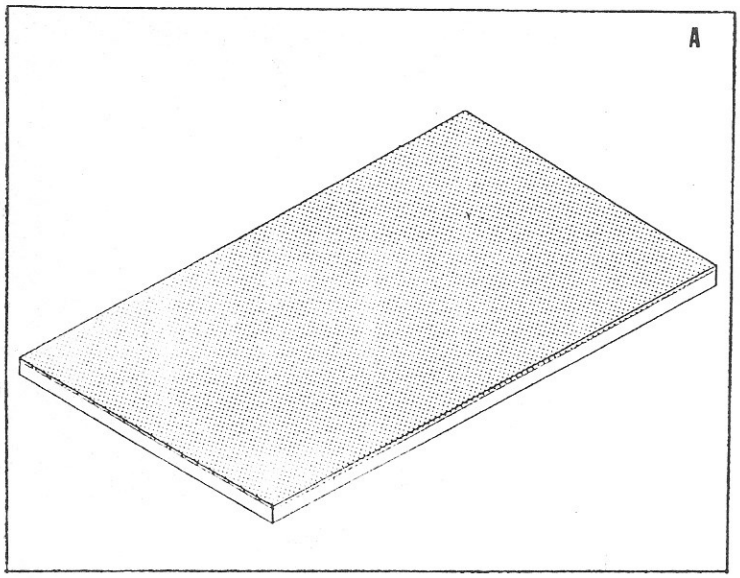

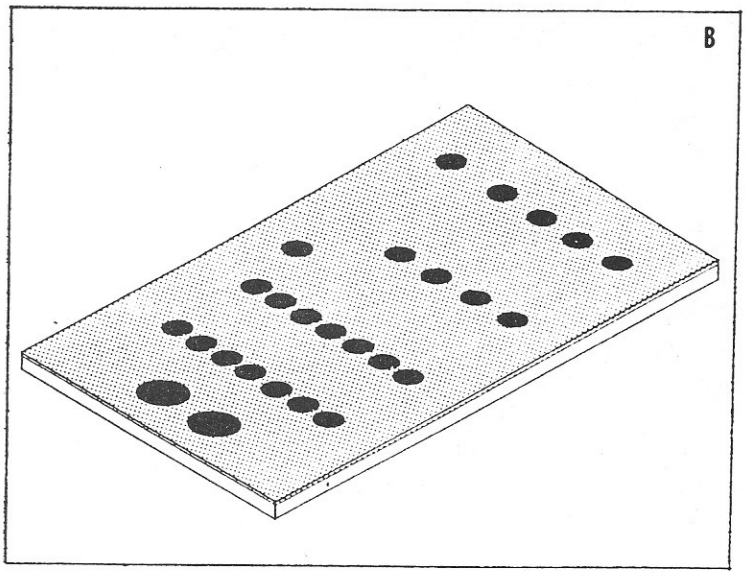

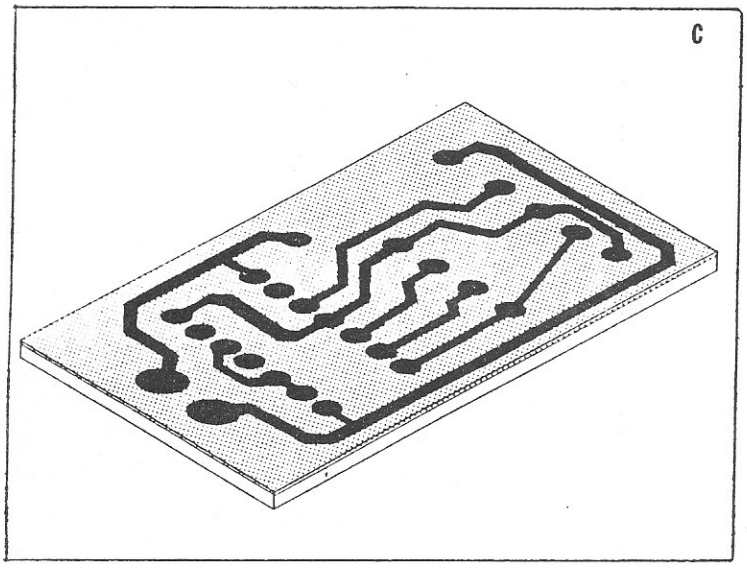

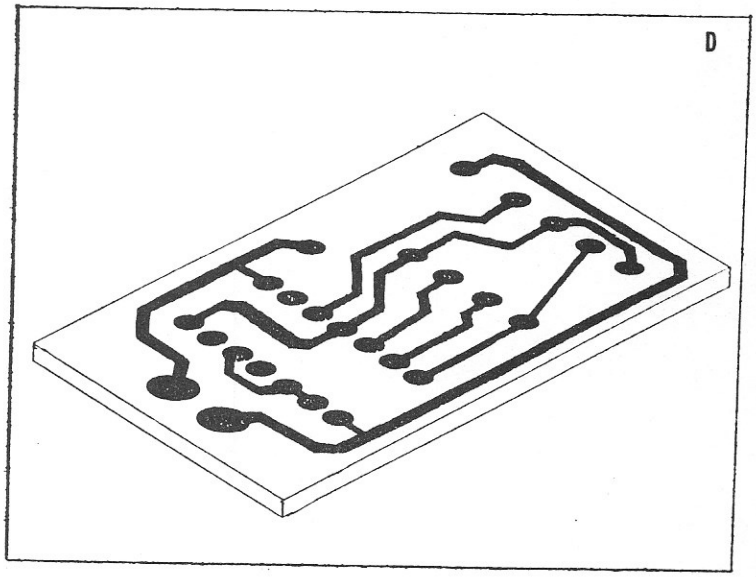

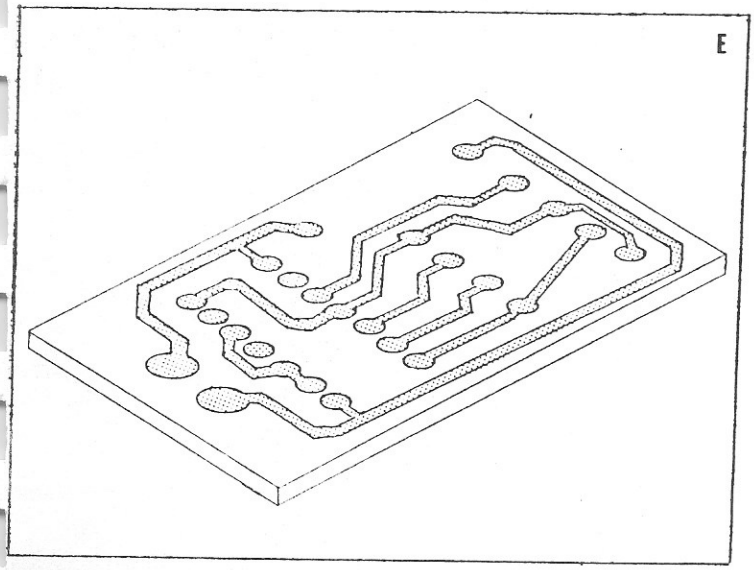

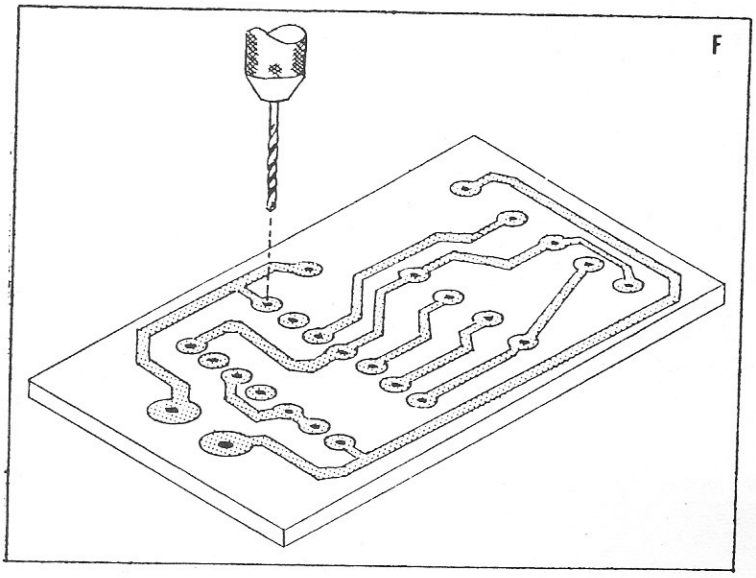

THE RUBY FILM PROCESS The Ruby Film process is a second way to produce printed circuit boards. This process allows artworks to be generated by the equipment team and boards produced either in an "at home" environment or by a local printed circuit board manufacturer, as resources permit. The enormous advantage to this and the next process described, is that the boards are clonable; i.e., once done, the artwork can produce an infinite number of identical boards. The tradeoff here is that a if home manufacture is undertaken, some additional equipment is needed beyond that for the Direct Etch process. In addition to a kit of chemicals for applying resist and etching the copper, an ultraviolet light setup is needed for developing the resist. Many such kits of chemicals are available and, as before, that part of the process will not be detailed here - follow the manufacturers instructions closely and observe all safety precautions.

The key part of the process to be described in detail here is the generation of the necessary artwork, using a material known as Ruby Film. Ruby Film is a tough clear plastic covered with a very thin, removable film of transluscent, ruby red plastic film. In general, this material will become the master artwork for our printed circuit board, the red film coating being removed where copper is desired on the board.

FIGURE 10-4 A: The artwork is started either on a board, cut to size and marked with hole locations (as shown in the drawings) or over an exact scale drawing of the board.

FIGURE 10-4 B: A piece of Ruby Film larger than the board (shown darkly shaded in our example) is then taped down over the marked board or scale drawing. Using a very sharp hobby knife such as an X-ACTO #1, and a semi-flexible blade such as an X-ACTO #11, trace around the perimeter of the first copper area desired, hard enough to cut through the ruby film but not so hard as to cut through the clear plastic beneath.

FIGURE 10-4 C: Using the tip of the knife, carefully peel or scrape the ruby film from the copper area so that the area is completely transparent.

FIGURE 10-4 D: Repeat the steps above for each copper area desired, so that all of the electrical connections ("runs") are made. When all are done, the artwork is complete and ready to produce boards.

At this point, the board material is to be cleaned, coated with resist, aligned with the artwork on top, exposed to ultraviolet light, the resist developed, and the unwanted copper etched off. The printed circuit kit you purchased comes into play for these operations. Be sure that you read

and thoroughly understand and follow the manufacturers' instructions. As in the direct etch process, the chemicals are as safe to use as it is possible to make them, but safety precautions should be taken; i.e., no children near the chemicals, a pan of clean water available to quickly rinse the eyes in the event of a splash, good ventillation, and proper disposal or storeage.

FIGURE 10-4 E: This drawing shows the completed board, with holes drilled for component leads and the unwanted copper etched away. Note that the runs look different than those of the direct etch example. This is because with the resist pen, lines were drawn on the board, and with the ruby film, broader, softer contours resulted. This makes no difference to the circuit at all. As long as the electrons have copper paths to follow from one component to another, they don't care a bit about the shape and routing of that path!

NOTE

In our example, the copper is shown as a lightly shaded area. Note that in our sketch, the clear plastic film will be sandwiched between the ruby film and the board material, because we are working directly on the bottom (copper) side of the board. When the artwork is later used as a negative to expose the resist, this spacing effect will allow a little light to "leak" under the edges and consequently the copper areas will be slightly smaller than otherwise. A better method is to lay the ruby film over a scale layout of the board. In this way, you will be working from the top (component) side of the board. When exposing the resist, the layers will be reversed and the ruby layer will be up against the copper and no such undercutting will occur.

FIGURE 10-4

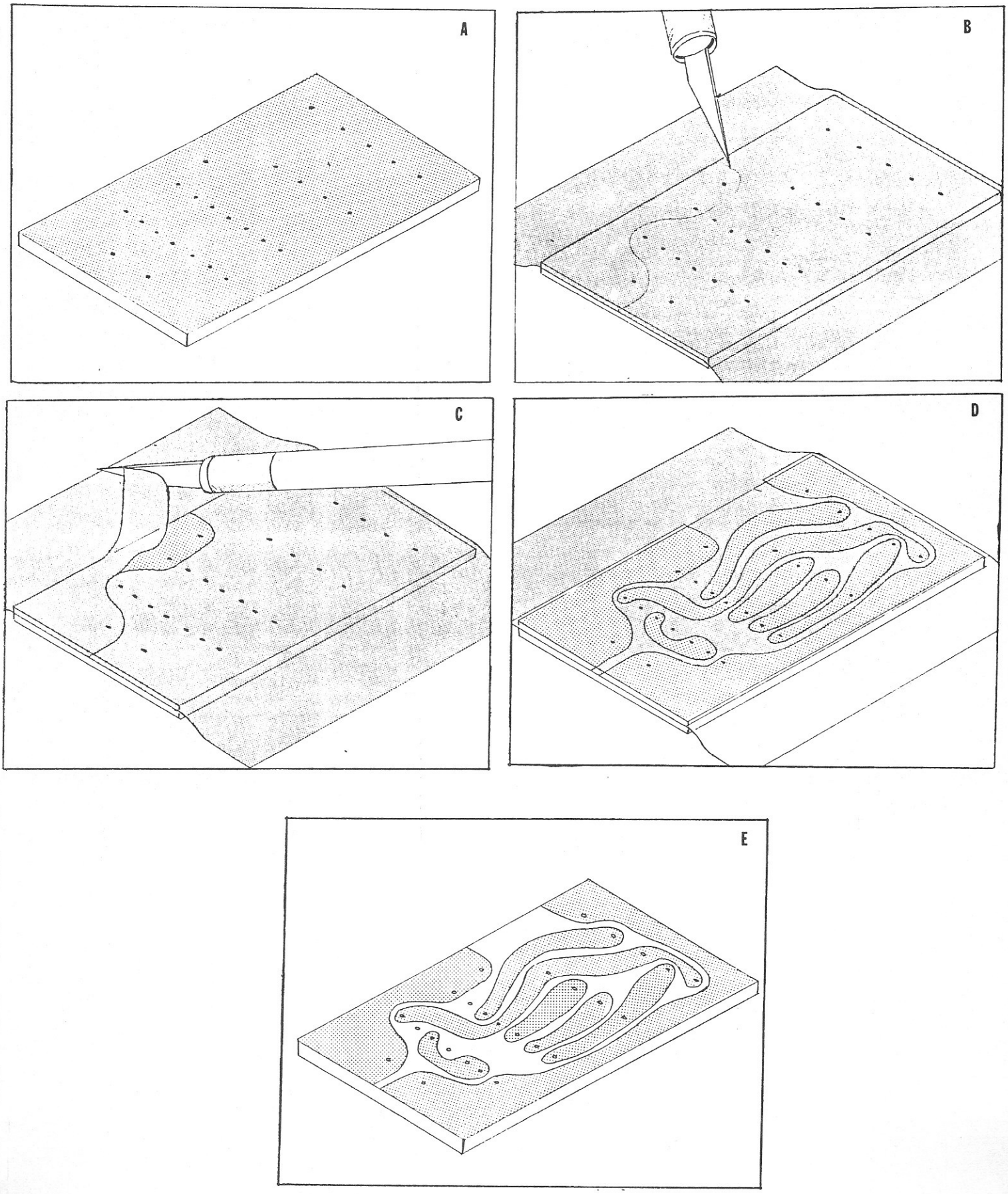

THE INKED POSITIVE PROCESS This is the process which the authors have found most successful in their circumstances, being fortunate enough to have a commercial printed circuit board shop willing to do small lots.

The inked positive process differs from the ruby film process by using a positive, rather than a negative artwork. In the ruby film process, the (dark) ruby film represented where the copper would be etched away, and the clear areas (light) represented where the copper would be left on the board. The inked positive process yields a positive artwork in which ink and rub-on features (dark) represent copper, and the clear (light) areas represent etched areas.

The author with the most experience in this artwork process feels it is the simplest to visualize, and, being inherently clumsey, likes the fact that sharp knives are not used.

The materials needed for this process are a frosted mylar drafting film, india black drawing ink and pens. All these items are available for modest cost at art and drafting supply stores. Rub-on dry features described earlier are a big time saver, and give the finished artwork a professional look. Eventually, a couple of Technical Pens, such as Mars-Staedlers' fine series of pens will make the inking process much easier and neater. Sizes #0000, #00, and #1 are ideal.

For those who are faint-hearted about drawing the circuit runs in ink, the artwork can be taped with narrow, opaque tape sold in electronics stores for the purpose.

Figure 10-5 A: Start as before with a pencil layout of the parts and circuit runs, preferably on 1/10" grid paper.

Figure 10-5B On a smooth, hard surface (the author uses a dining room table to the occasional consternation of his wife) tape the grid paper down, and tape a piece of mylar over it, frosted side up. The mylar should be a couple of inches larger, all round, than the finished board will be. Add pads of the appropriate size everywhere a component lead or external wire is to come through the board. Make sure that the pads do not touch one another.

Figure 10-5 C: Make the connections with pen and ink on the mylar. Except for the fact that the circuit runs should not touch one another, there are very few rules. The shape of the runs is unimportant, but they should not be excessively "skinny" except where it is necessary to neck one down to go through a narrow gap. Draw every run narrow first, then when satisfied, fatten them up a bit. Some examples of finished artwork appear in the "Projects" section of this

book. Mistakes can be easily scratched away with a pin or (shudder) a sharp knife.

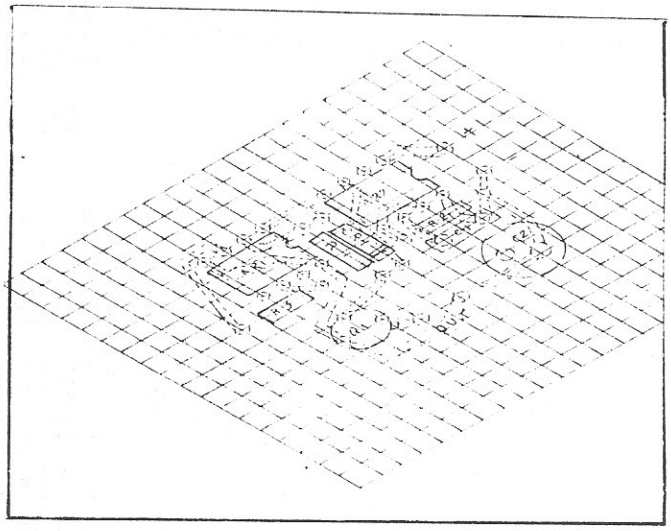

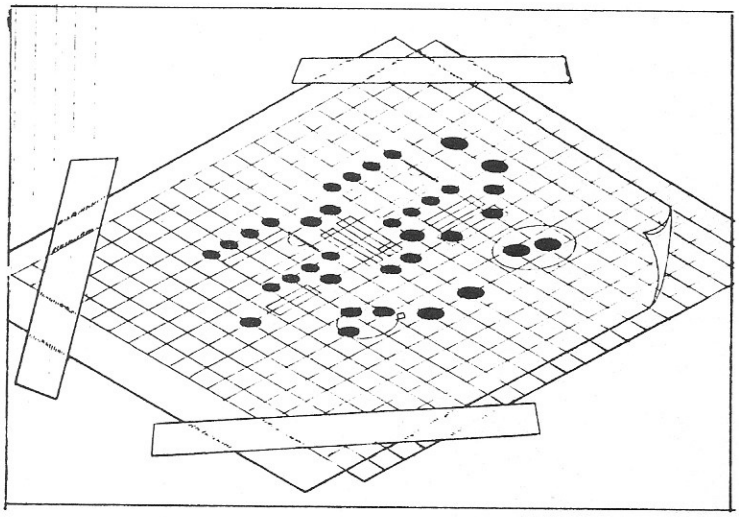

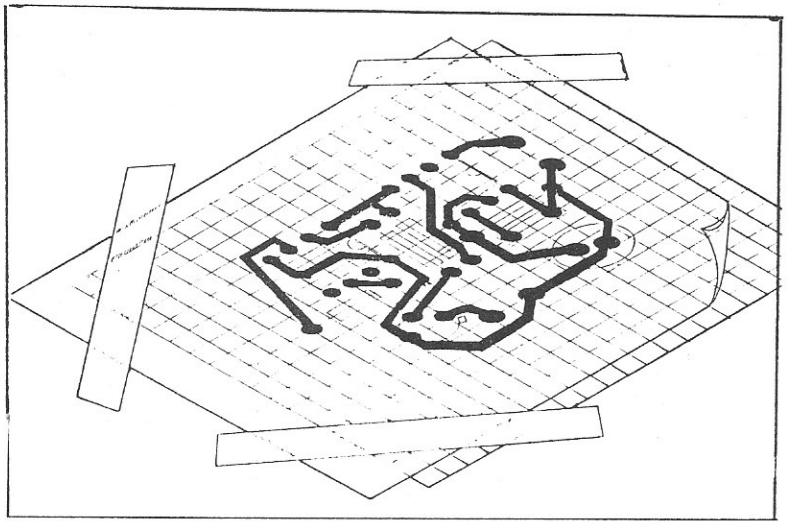

When the artwork is dry, it is ready for your board shop. You will have to tell them that you want a Single-Sided Board with the <u>Emulsion Side of the Artwork against the board</u> and tin or tin-lead electroless plating on the copper.

Making artwork and a circuit board are things you may not think you can do. YOU CAN! The advantages are many, and a couple of failures during the learning phase should not dissuade you. Plunge in!

CHAPTER XI

COMMUNICATING WITH OTHER GROUPS

In forming and conducting an Adaptive Equipment Team, you will have the capability to do exciting, worthwhile and rewarding things for the handicapped in your community. After a short start-up phase in which you will get a feel for the equipment, your designs and solutions will become more and mor ingenious. You will learn that not all components have to be purchased and not all materials need to be those that would be used in a commercial product. You will learn to substitute, to invent and to improvise. More important, learning Adaptive Equipment Team concepts will change forever the way you look at everyday items. In a trip through the local Five and Dime, you will see items on the shelf that will immediately suggest an application in Adaptive Equipment. Garage sales will be a treasure trove of goodies. Your basement will begin to fill.

The nadir will come the morning you rise before the sun and surriptitiously sneak outside in the dark, in robe and slippers, to retrieve that glorious, glittering item from your neighbors' trash.

With your project's maturity, however, you will also begin to realize that none of us is blessed with enough time, talent and resources to do it all. The ultimate in effectiveness will come when each Equipment Team can share its designs, its resources, its successes and its failures with another. The ultimate tragedy will be the two Equipment Teams working in adjacent towns who do not sit with each other periodically and share their experiences.

For one thing, the design and debugging phases on other than the simplest projects really consumes the majority of the time. Actual fabrication of the devices is a small part of the game after the Team achieves some degree of proficiency in assembly techniques. Why not eliminate the design and debugging entirely on most projects be copying another team that has already addressed and solved that problem? After all, they should be welcome to your designs as well, and the ultimate winner is the disabled person who will be the end-item user. The simple goal is:

SEARCH FIND COMMUNICATE SHARE

One thing that is needed desperately is a central clearing house for designs from all over the country. If a permanent

organization be found that would receive, catalog, cross-reference, file, copy and redistribute designs from scattered individuals and teams, so that each team could reap the benefits of all the others, the lot of the disabled in the community would be improved to an immeasurable degree. Perhaps among the readers of this volume there will be someone who is in a position to know and approach a foundation or a university who would be willing, over the long haul, to take on the task of becoming the central design bank for Adaptive Equipment designs. It would be a magnificent contribution to mankind.

The authors can easily see the day, if Adaptive Equipment Teams spread throughout the land, when there will be annual Adaptive Equipment shows and fairs, on a state or region-wide level, so representatives from institutions, parents groups and professional societies can meet, see each others accomplishments and swap initiatives. Such cross-polination of ideas will at last permit the realization of the dream - that the anquish of those with whom fate has dealt so cruelly, can be at least partially alieviated by the dedication and resourcefulness of their fellow man.

APPENDIX A

A GLOSSARY OF TERMS

A.C. - See Alternating Current

ALKALINE BATTERY - A battery similar to the common zinc-carbon battery but with more capacity (life).

ALLIGATOR CLIP - A spring-loaded clip with alligator-like jaws for temporarily attaching a wire to a circuit under test.

ALTERNATING CURRENT - An electric current which alternately reaches maximum in one direction, falls to zero, rises to maximum in the other direction and falls again to zero.

AMERICAN WIRE GAGE (AWG) - A system of standardization in the U.S. for specifying the size (diameter) of wire.

AMMETER - An instrument for measuring the amount of electrical current flowing in a circuit.

AMP - Abreviation for Ampere. Also the name of a major manufacturer of terminals.

AMPERE - The standard unit of measure for electrical current. Also see MILLIAMP.

AMPLIFIER - An electronic circuit that produces an output signal nearly identical to the input signal, but increased in amplitude or power.

AMPLIFY - To increase in magnitude or power, the current or voltage of a signal.

ANODE - The positive terminal of a battery or diode.

AWG - See American Wire Gage

AXIAL LEADS - Component leads which exit the part along the major axis of the part.

BATTERY - A device for converting chemical energy to electrical energy.

BATTERY CLIP - A clip with appropriate electrodes to connect wires to a battery.

BREADBOARD - A device to which electrical parts are attached in

order to try out a new circuit.

CAPACITANCE - The property of storing electrical energy in a pair of conductive plates, separated by an insulator.

CAPACITOR - An electrical component used to add capacitance to a circuit.

CONDUCTOR - A material which permits the flow of electrons.

CONTINUITY - A continuous path for the flow of electricity through a circuit.

D.C. - See Direct Current

DIODE - A semiconductor device which permits a flow of electricity in one direction, and inhibits it in the other.

DIP - Abbreviation for Dual-Inline-Package, a component style used for many commonly available microcircuits.

FREQUENCY - The number of recurrences of a periodic event per unit time. In electronics, usually the number of cycles (Hertz) of the waveform which occur per second.

FUSE - A device which protects a circuit from overload by being a weak link of predetermined value, "fusing" the circuit open in the event of an overload.

GROUND - The reference point in a circuit from which voltage is measured.

HERTZ - A unit of frequency equal to one (1) cycle per second.

I.C. - Abbreviation for Integrated Circuit.

IMPEDANCE - The total opposition to the flow of A.C. electrical current in a circuit at a given frequency.

INDUCTANCE - The property which resists change in the current existing in a circuit at a given moment.

INDUCTOR - A component, usually a coil of wire wrapped upon an iron core, used to add inductance to a circuit.

INSULATOR - Any material which will not conduct electrons.

INTEGRATED CIRCUIT - A device incorperating many elements of microelectronic components in one package.

JACK - A connector into which a plug may be inserted and removed for quick connection of switches, microphones, headphones, etc.

LAMP - A device which produces light by heating of a resistive element, usually a fine filament.

LAMP HOLDER - a Socket

LINE CORD - A two or three wire cord with a plug on one end, connecting an electrical device with an outlet.

KILOHM - One Thousand Ohms

MEGOHM - One million ohms

MERCURY SWITCH - An electrical switch consisting of a glass bulb in which a pool of liquid mercury connects two terminals depending on which way it is tipped.

MICROCIRCUIT - See Integrated Circuit

MILLIAMP - (Properly MILLIAMPERE) 1/1000 of an Ampere.

MILLIOHM - 1/1000 of an ohm

MILLIVOLT - 1/1000 of a volt.

NORMALLY CLOSED - (N.C.) A term applied to switch or relay contacts that normally rest in the "make" or "on" state.

NORMALLY OPEN - (N.O.) A term applied to switch or relay contacts that normally rest in the "break" or "off" state.

OHM - The basic unit of electrical resistance.

OHMMETER - An instrument for reading the resistance of an electrical component or circuit.

OP-AMP - (Operational Amplifier) A circuit that performs the electronic equivilent of mathmatical operations.

PAD - Those areas of a printed circuit board that components are soldered to.

PHONE JACK - A jack designed for microphone/headphone plugs.

PIEZO-ELECTRIC TRANSDUCER - An electrical device which converts electrical charge to an audible beep.

PLUG - The removable part of a circuit connecting - disconnecting device which mates with a jack.

POTENTIOMETER - A three terminal variable resistor.

PRINTED CIRCUIT BOARD - (PC Board, PC Card, Printed Wire Board) An insulating board with photoetched copper circuitry upon it.

REED SWITCH - A switch consisting of two ferro-magnetic reeds enclosed in a glass tube that operates in the presence of a magnetic field.

RELAY - An electromechanical switch, in which the switch contacts are operated by an integral electromagnet, driven by outside circuitry.

RESISTANCE - The property of electrical conductors that inhibits the perfectly free flow of electrons in a circuit.

RESISTOR - An electrical component which is designed to place a specific resistance in a circuit.

SCHEMATIC DIAGRAM - A graphic representation, in standard symbology, of the various electrical components which make up a given circuit.

SOLDER - A low melting point metal alloy that produces an electrical and mechanical connection by bonding two conductors together.

SPEAKER - An electrical component which converts an electrical signal into a comparable audio signal.

SWITCH - A device which completes (makes) an electrical circuit, or opens (breaks) a circuit.

TIMER - An electrical circuit that produces a signal or event in a regularly timed fashion. Also known as a clock circuit.

TRACE - A conductor on a Printed Circuit Board.

TRANSFORMER - An electromagnetic somponent which transforms energy in one circuit to another form for use in a different circuit.

TRANSISTOR - An active semiconductor which will amplify, oscillate or switch, depending on surrounding circuit elements.

VOLT - The unit of measure of electromotive force or pressure.

WATT - Basic unit of electrical power, when describing electrical performance. Basic unit of heat generated by components.

WIRE - A single or multiple stranded group of metalic conductors, with or without insulation coating.

APPENDIX B

PROFESSIONAL SOCIETIES

Society of Logistics Engineers
303 Williams Ave, Suite 922
Huntsville, Alabama 35801
(205) 539-3800

American Society of Mechanical Engineers
345 E. 47th Street
New York, New York 10017
(212) 463-2300

National Society of Professional Engineers
2029 K Street, NW
Washington, DC 20006
(202) 463-2300

Society of Women Engineers
342 E. 47th Street, Rm. 305
New York, New York 10017
(212) 705-7855

United Engineering Trustees
345 E. 47th Street
New York, New York 10017
(212) 705-7828

World Federation of Engineering Organizations
19 Rue Blanche
F-75006
Paris, France

Institute of Electrical and Electronics Engineers
345 E. 47th Street
New York, New York 10017
(212) 705-7900

National Engineering Consortium (Electronics)
1211 W. 22nd Street
Oak Brook, Illinois 60521
(312) 325-5700

American Society for Quality Control
230 W. Wells Avenue, Suite 7000
Milwaukee, Wisconson 53203
(414) 272-8575

American Institute of Industrial Engineers
AIIE Institute Headquarters
25 Technology Park / Atlanta
Norcross, GA 30092

The American Radio Relay League
325 Main Street
Newington, CT

APPENDIX C

SOURCES OF COMPONENTS

JAMECO ELECTRONICS
1355 Shoreway Road
Belmont, California
94002
(415) 592-8097

NEWARK ELECTRONICS
4801 N. Ravenswood
Chicago, Illinois
60640
(312) 784-5100

DIGI-KEY CORP.
701 Brooks Ave., South
Thief River Falls, Minnesota
56701
1-800-344-4539

RADIO SHACK
Obtain at retail stores

APPENDIX D

BASIC TOOLS AND MATERIALS

TOOLS

INITIAL LAY-IN

Soldering Iron (25-35 watt) with spade shaped tip
4" Diagonal Wire Cutters
4" Needle Nosed Pliers (chain nose)
Wire Strippers
Sissors
#1 Xacto Knife with supply of #11 blades
6" Adjustable Wrench or Set of Small open-end Wrenches
Phillips Screwdrivers #0 & #1
Small Flat-blade Screwdriver

SECOND LEVEL

Assorted small drills (including #55)
Hand Drill (eggbeater type)
Pin Vise (for small Drills)
Hot Glue Gun
Bench or Table Vise
Soldering Iron (100-150 watt) with stand

NICE-TO-HAVE

Drill Press
Pop Rivit Tool
Dremel Motor Tool Set with Speed Control
Hemostats

MATERIALS

INITIAL LAY-IN

Solder (60/40 Rosin Core)
1 oz. Isopropyl Alcohol (rubbing Alcohol)
Cotton Swabs
Old Washcloth or Natural Sponge (for cleaning iron tip)
Paper Towels (for spills)
Masking Tape
Stranded Wire from AWG #24 thru AWG #16
Buss Wire AWG #24
Sleeving for buss

Ass't shrink sleeving
Lacing Cord (Dental Floss in a pinch)

NICE TO HAVE

1 oz. liquid rosin flux
Ass't thicknesses of foam rubber
Ass't thickesses of silicon foam rubber
Tube of Silicon Rubber (RTV) Bathtub caulk

APPENDIX E

THE SPOT TIE

Nothing reflects upon the professional appeal of a piece of electronics equipment like a neat, orderly appearance, and nothing promotes such a neat appearance like neatly bundled and tied wire cables.

There are two ingredients to neat looking wire cables. First, some forethought as to where the wire bundles should run within the unit. A look at the interior of the equipment under construction, and a few minutes planning how the wires should run will ensure that the finished product will not have the appearance of a rats' nest. The second ingredient is the spot tie, a special knot, tied with lacing cord, to keep the wires together in the desired bundles.

Assuming there are no Boy Scouts available to call upon, the knot should be easy enough to learn from the Figure on the next page.

Figure E1-A - Holding both ends of a piece of lacing cord in one hand, pass a loop under the cable.

Figure E1-B - Using one of the ends, pass a loop through the loop.

Figure E1-C - Pass the free end of the cord through the **second** loop, and pull both ends until the knot is tight. The knot should be tight enough to hold the wires securely together, but not so tight as to cut the tender insulation on the wires.

Figure E1-D - Tie an ordinary shoe-lace knot on top of the spot tie and cut the loose ends to within about 1/4" of the knot.

SPOT TIE

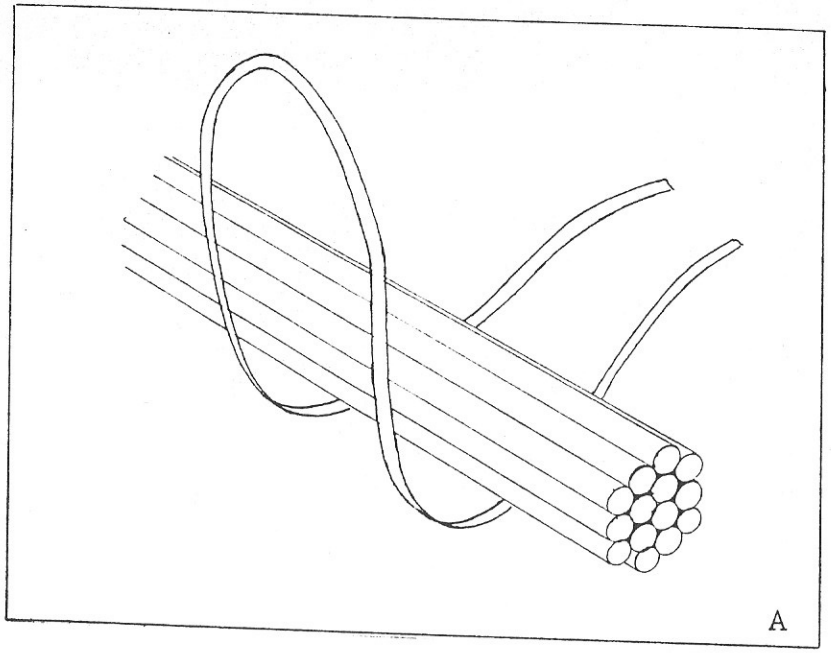

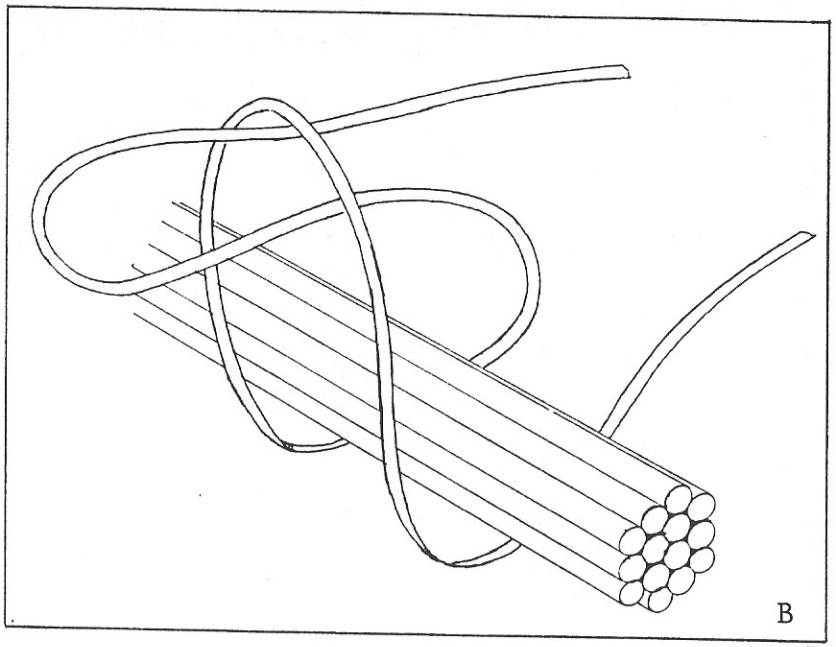

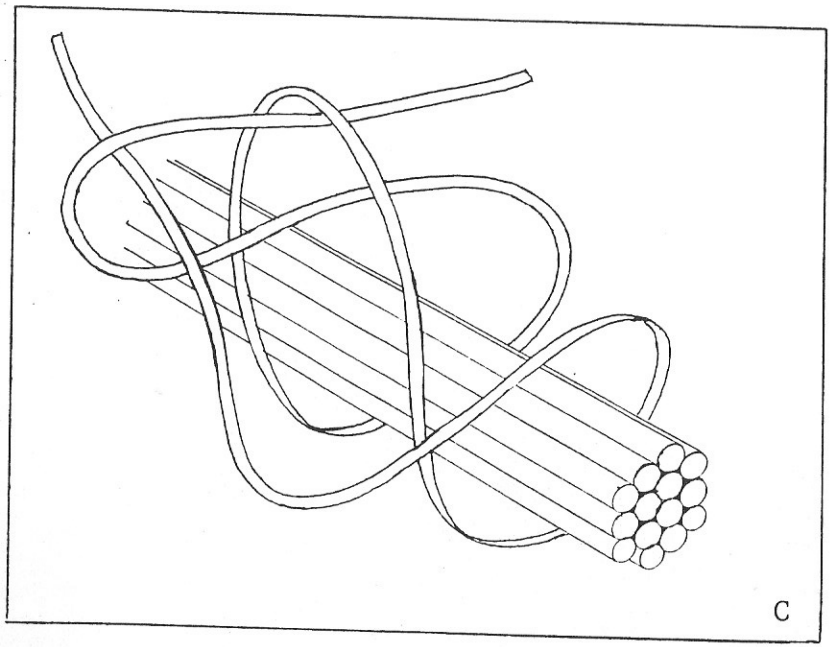

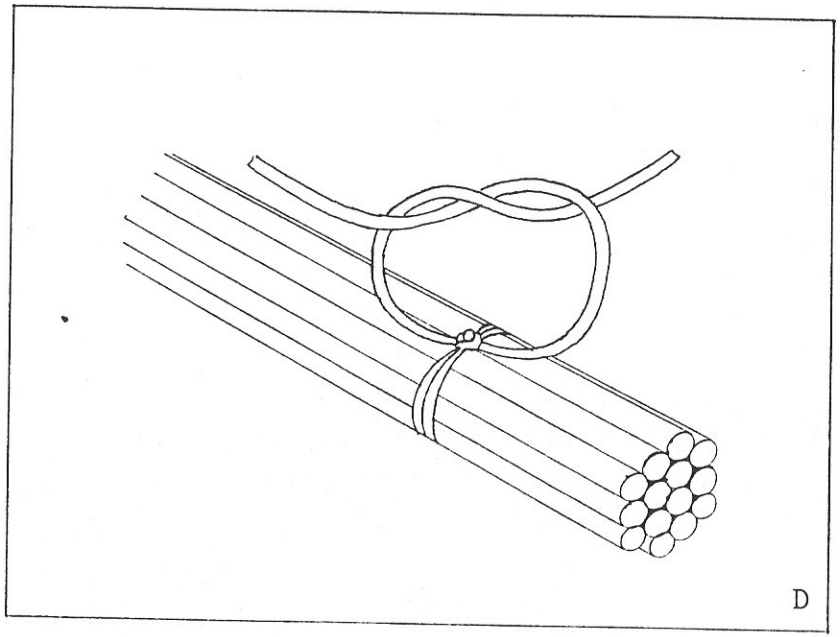

APPENDIX F

EXISTING DESIGNS

This appendix is submitted as a record of what has been done by Binghamton Chapter 96 of the American Institute of Industrial Engineers, working with its clients in the southern New York area. Since adapting and building equipment for the handicapped depends to such an overwhelming degree upon the condition and ability of the disabled individual for whom the equipment is intended, the authors cannot submit any design as suitable for any particular application. You and your team, supported by qualified medical or Occupational Therapy professionals, must make the decision as to whether a particular design is or is not suitable in your situation, based upon local conditions.

QUICK ADAPTER

A quick sure way to adapt most any battery operated toy or entertainment device, is to build one or more of these Quick Adapters. Cut a Circle, about the size of a "C" Battery from double siced, thin, Printed Wire Board stock, i.e., fiberglass with copper on both sides. Clean the edges, so that no smeared copper is left, and solder two wires to it, one to each side. The other end of the wires takes an in-line, 1/8" miniature phone jack.

When finished, simply slide the wafer into the battery compartment between any two batteries, or between a battery and an end contact, and the device is adapted. Plug in a specialty switch and you are ready to go.

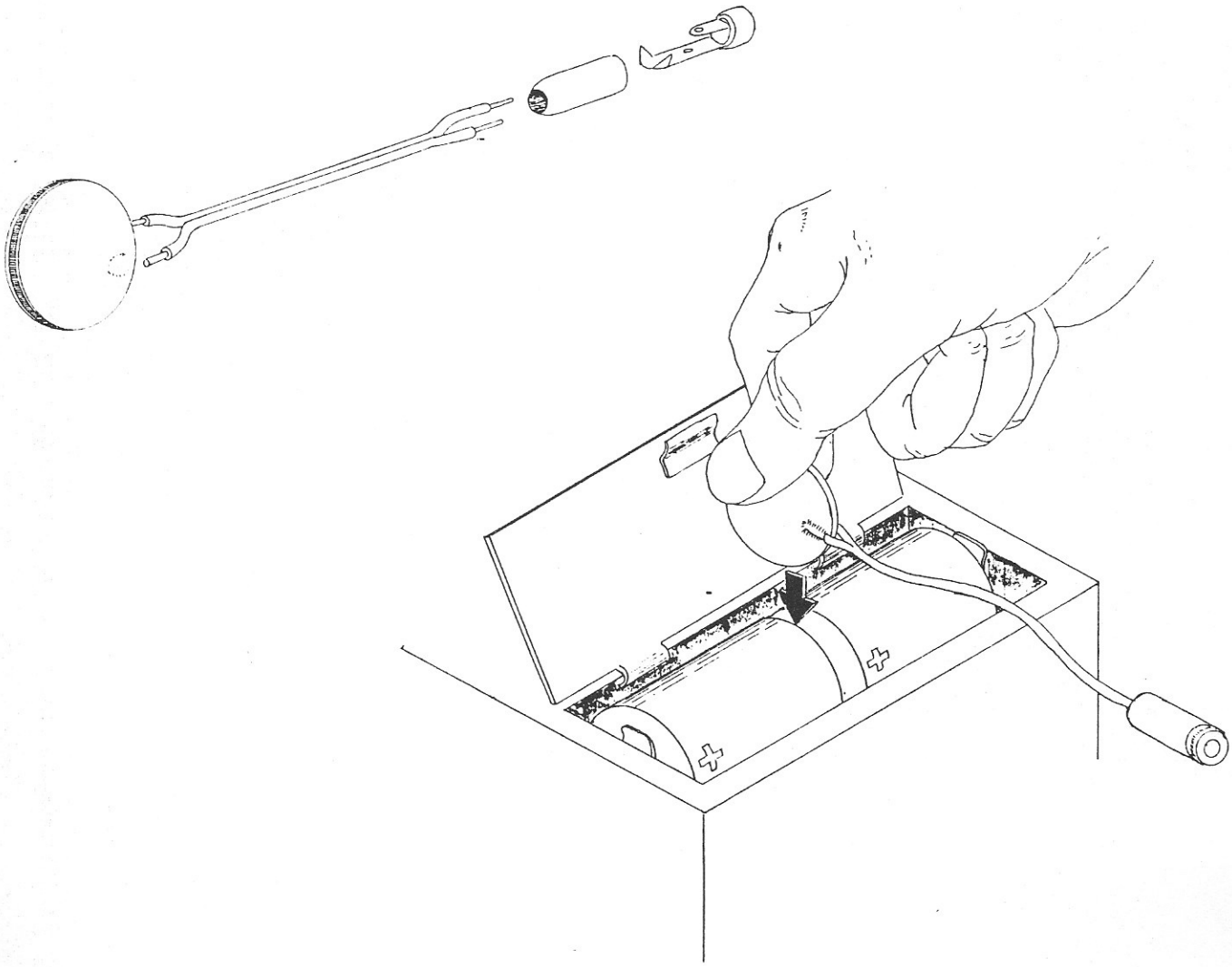

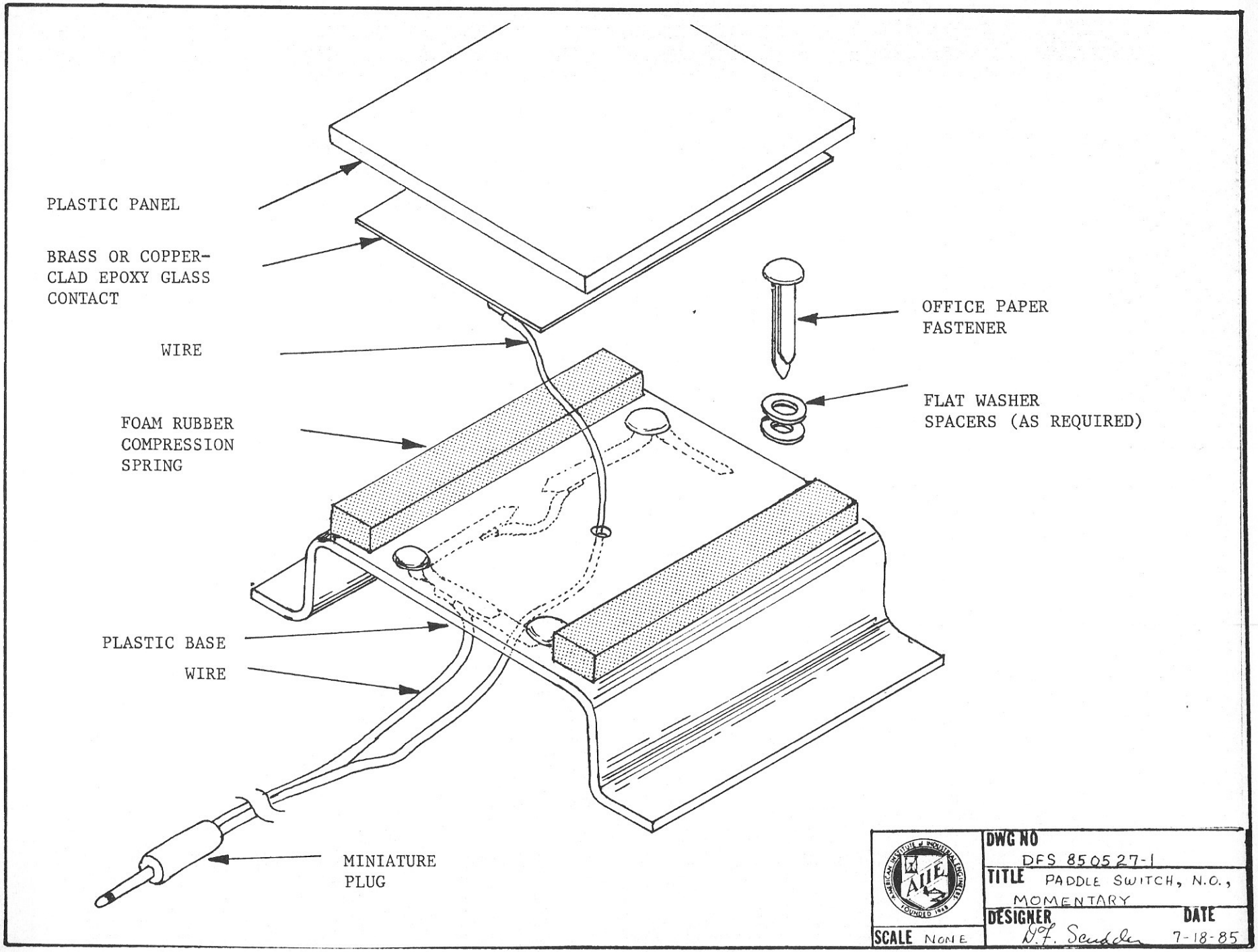
PLASTIC PANEL
BRASS OR COPPER-CLAD EPOXY GLASS CONTACT
WIRE
FOAM RUBBER COMPRESSION SPRING
PLASTIC BASE
WIRE
MINIATURE PLUG
OFFICE PAPER FASTENER
FLAT WASHER SPACERS (AS REQUIRED)
DWG NO
DFS 850527-1
TITLE
PADDLE SWITCH, N.O., MOMENTARY
DESIGNER
D.F. Scudder
DATE
7-18-85
SCALE NONE

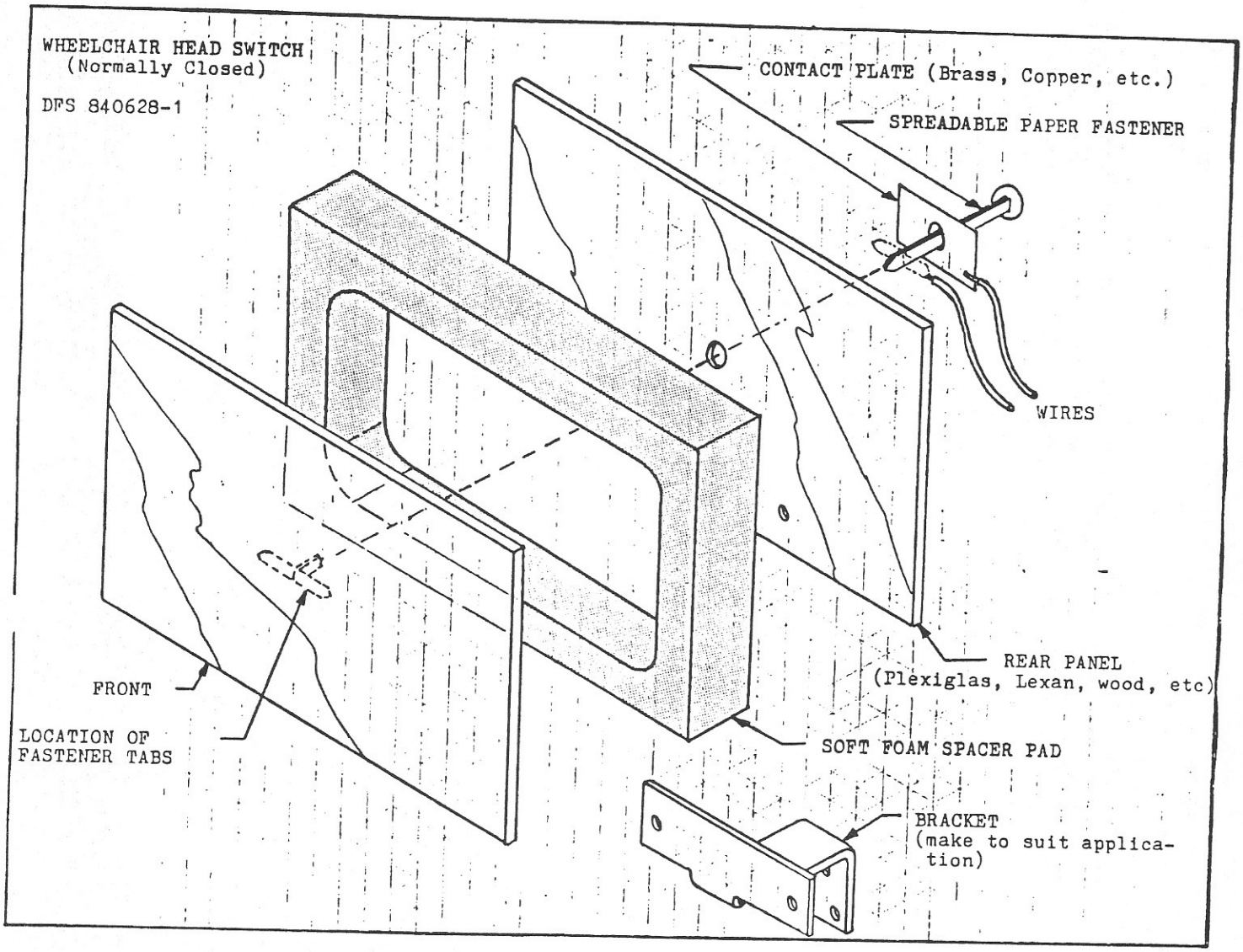
WHEELCHAIR HEAD SWITCH
(Normally Closed)
DFS 840628-1
CONTACT PLATE (Brass, Copper, etc.)
SPREADABLE PAPER FASTENER
WIRES
REAR PANEL
(Plexiglas, Lexan, wood, etc)
FRONT
LOCATION OF
FASTENER TABS
SOFT FOAM SPACER PAD
BRACKET
(make to suit application)

WHEELCHAIR ARMREST
OPERATED ALARM

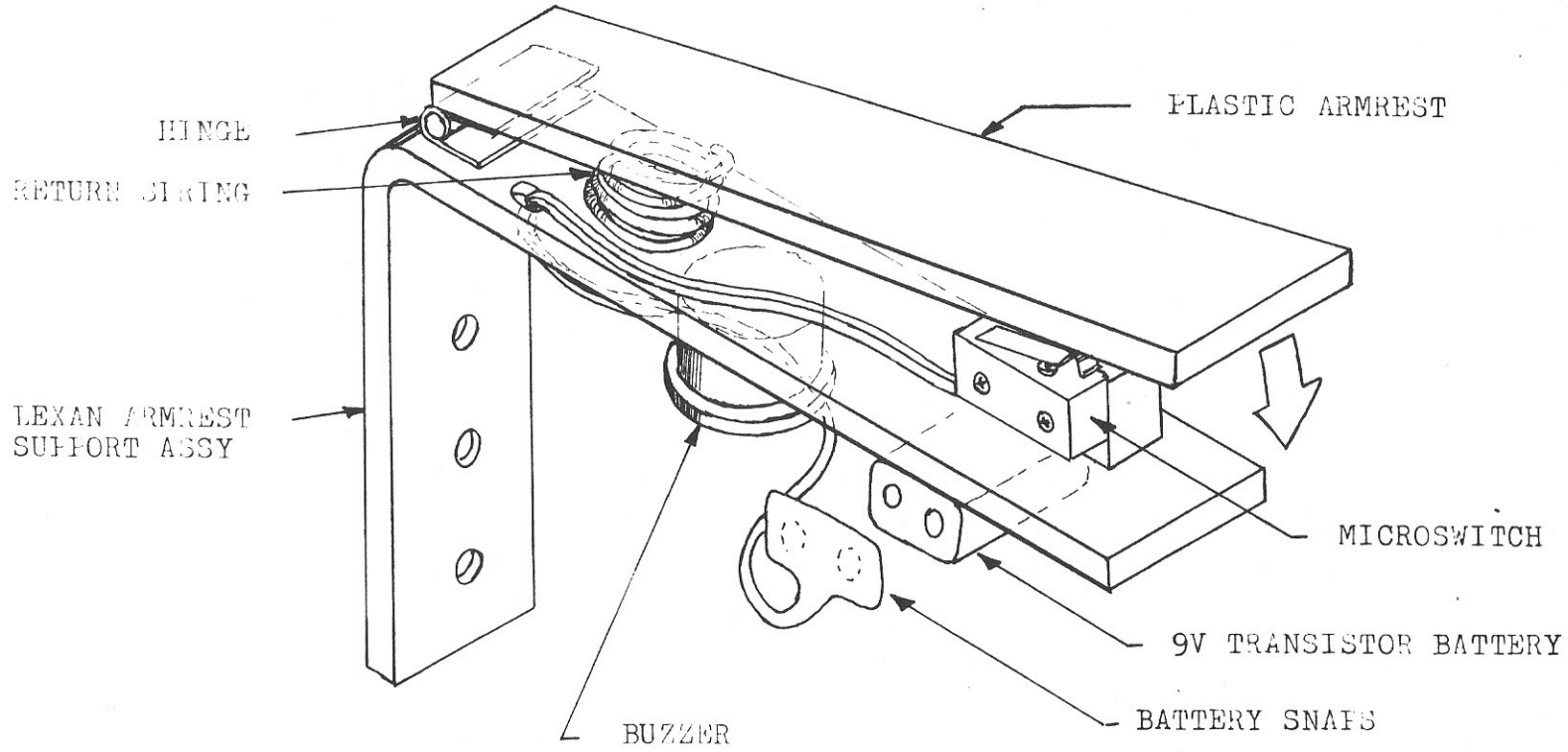

SCALE NONE	DWG NO DFS 850116-1
	TITLE ASSY, WHEELCHAIR ARMREST OPERATED ALARM
	DESIGNER N. F. Scudder DATE 1/16/85

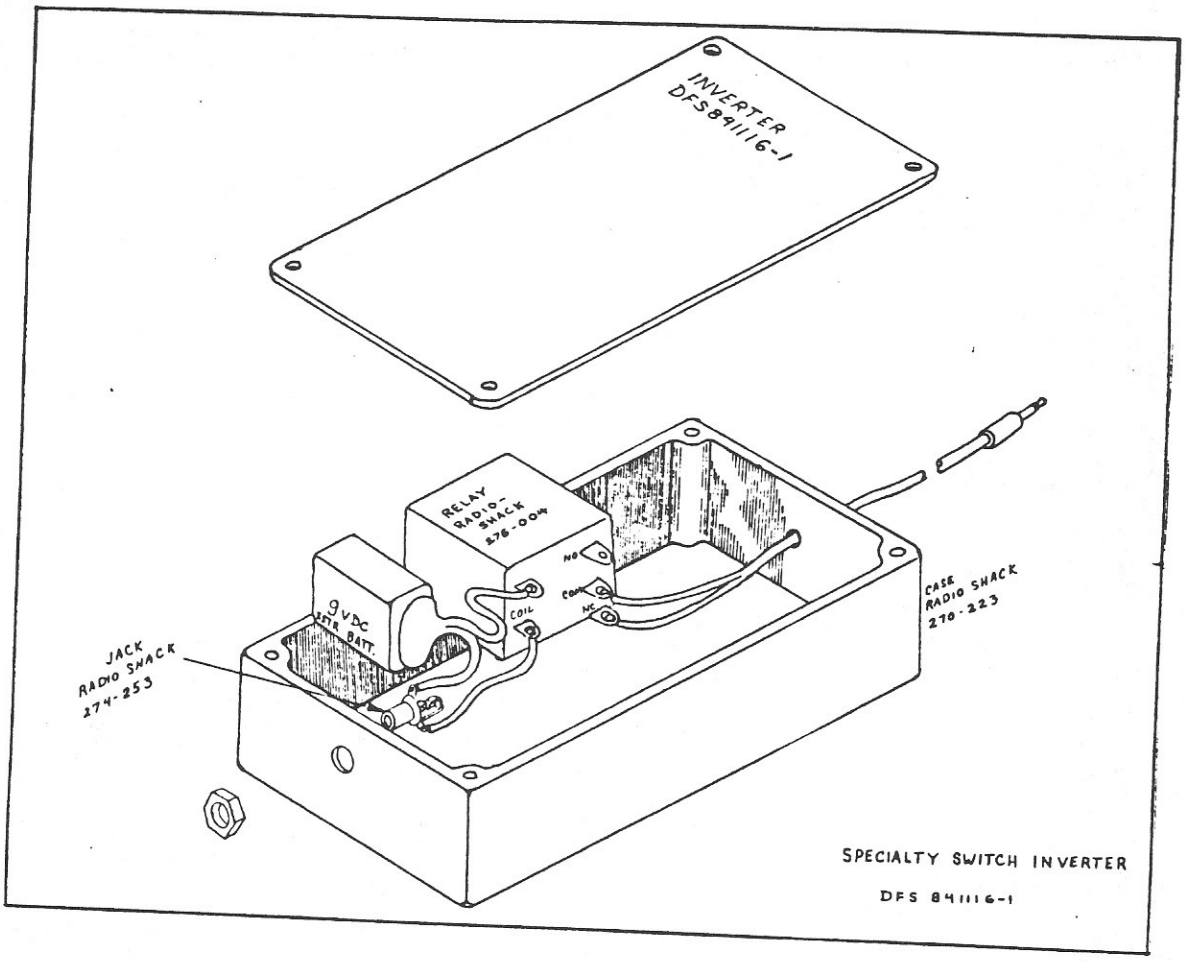

SPECIALTY SWITCH INVERTER

DFS 841116-1

A.C. INTERFACE

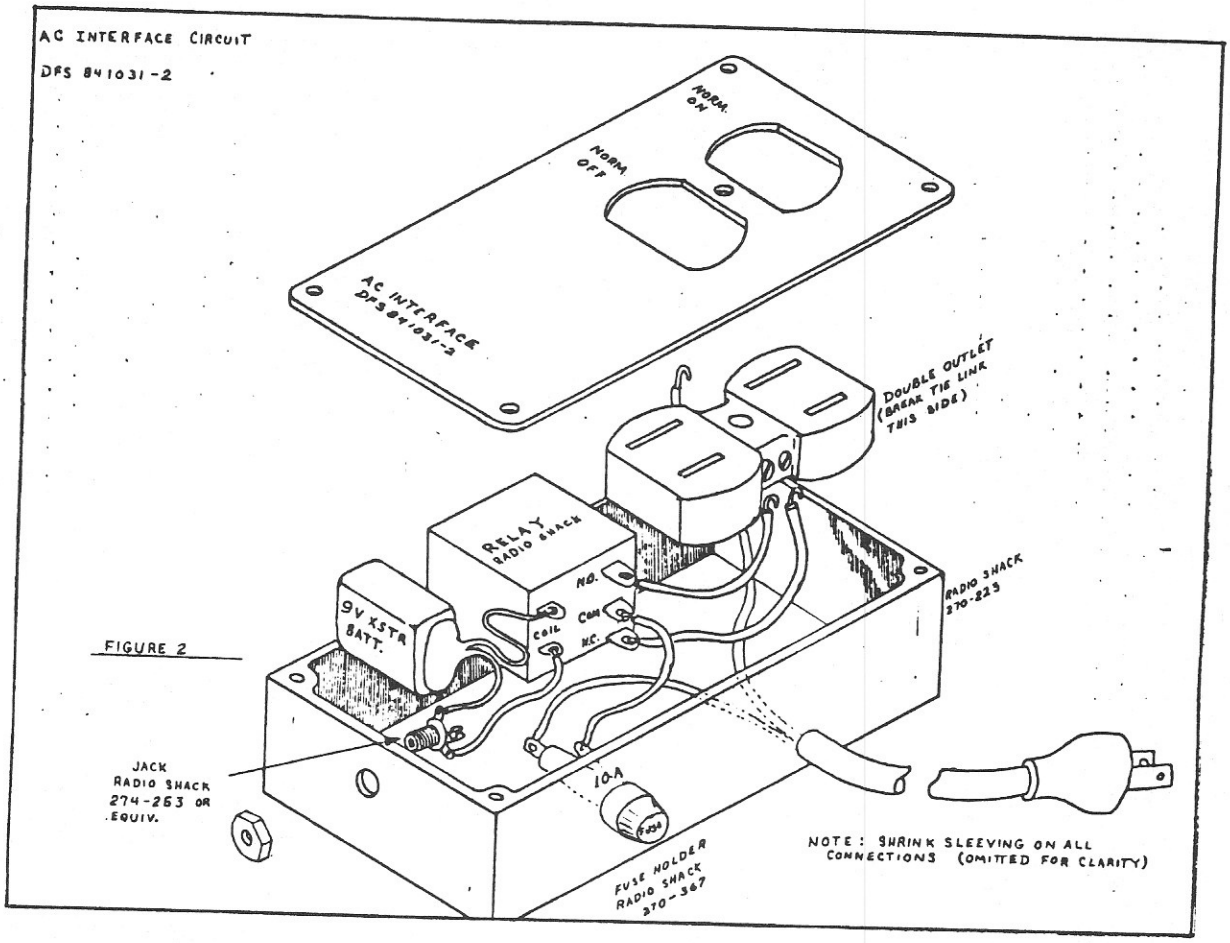

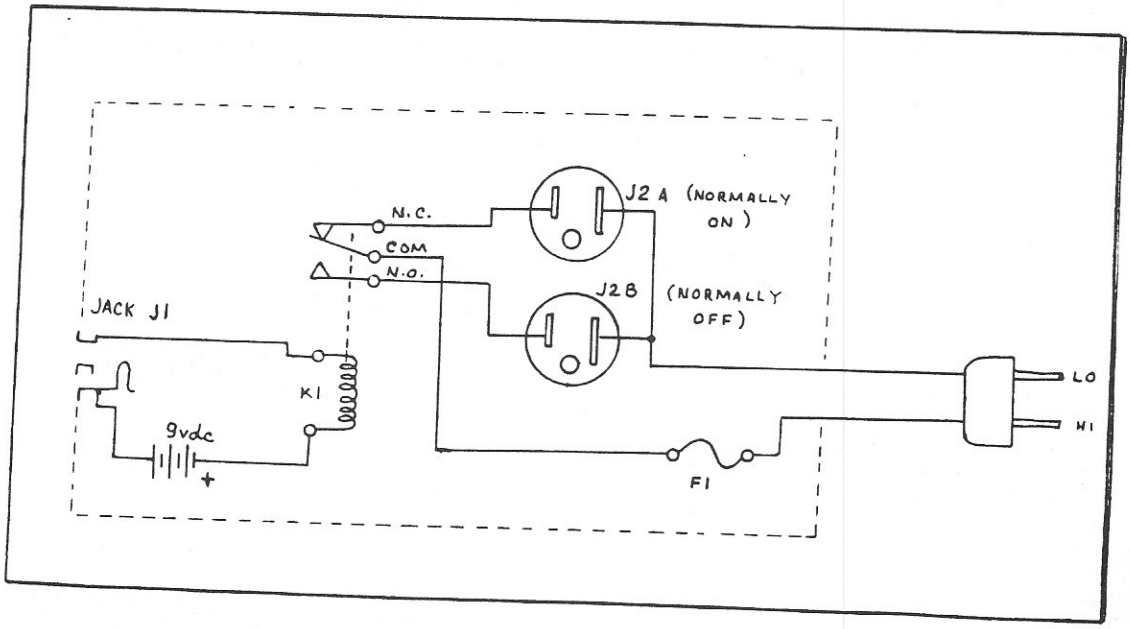

PARTS LIST: AWK 84 1104-1

DESCR: TIME DELAY INTERFACE

SH 1 OF 1

IT	PART NO	DESCR	REF	QT	U/M	COMMENTS
1	TLC555	TIMER MICROCIRCUIT	IC1	1	E	Radio Shack 276-1718 or equiv.
2	2N.	TRANSISTOR	Q1	1	E	
3	1N4148	DIODE	CR1	1	E	RADIO SHACK 276-1122 or equiv.
4		Potentiometer 500K, Lin.	R1	1	E	RADIO SHACK 271-210 or equiv.
5		RESISTOR 10KΩ, ¼W	R2, R3, R5	3	E	RADIO SHACK 271-1335 or equiv.
6		CAPACITOR 1000μF (RAD.)	C1	1	E	RADIO SHACK 272-1019 or equiv.
7		CAPACITOR 100μF (RAD.)	C3	1	E	RADIO SHACK 272-1016 or equiv.
8		CAPACITOR .01μF (CER.)	C2	1	E	RADIO SHACK 272-131 or equiv.
9		RELAY 6-9VDC, 500Ω	K1	1	E	RADIO SHACK 275-004
10		1/8" MINIATURE JACK	J1	1	E	RADIO SHACK 274-251 or equiv.
11		PUSH BUTTON (N.C.)	S1	1	E	RADIO SHACK 275-1548 or equiv.
12		TOGGLE SWITCH SPST	S2	1	E	ANY SOURCE
13		9V TRANSISTOR BATTERY	B1	1	E	ANY SOURCE, ALKALINE PREFERRED
14		BATTERY CLIP	—	1	E	RADIO SHACK 270-325 or equiv.
15		BATTERY HOLDER	—	1	E	RADIO SHACK 270-326 or equiv.
16		PROJECT CASE	—	1	E	RADIO SHACK 270-223 or equiv.
17		8-Lead IC Socket	—	1	E	RADIO SHACK 276-1995 or equiv.
18	AWK 851119-1	Schematic Diagram		REF		
19		RESISTOR 33KΩ, ¼W	R4	1	E	

AMERICAN INSTITUTE of INDUSTRIAL ENGINEERS AIIE FOUNDED 1948

REVISION:
REV A 12-10-85 ADDED R4/R5

DESIGNER A. KRESOCK

DATE 11-06-85

N F Scudder

When battery power is first applied, output at Pin 3 of IC_1 goes low. Q_1 has practically no base biasing and relay K_1 remains deactivated. External device through P_1 connection is turned off. A specialty switch (normally open), when connected at J_1 and then closed, will cause Pin 3 to go high on other side of R_3 at base of Q_1. Q_1 is switch on and K_1 is activated for the duration of the delay as set by R_1. The external device is thus turned on during this time and goes off again at the end of the period. S_1 can be used as an interrupt or "set-to-zero" function to halt the delay by momentarily breaking the battery connection and then re-connecting the battery power to the circuit. The switch at J_1 then can be used to begin the delay.

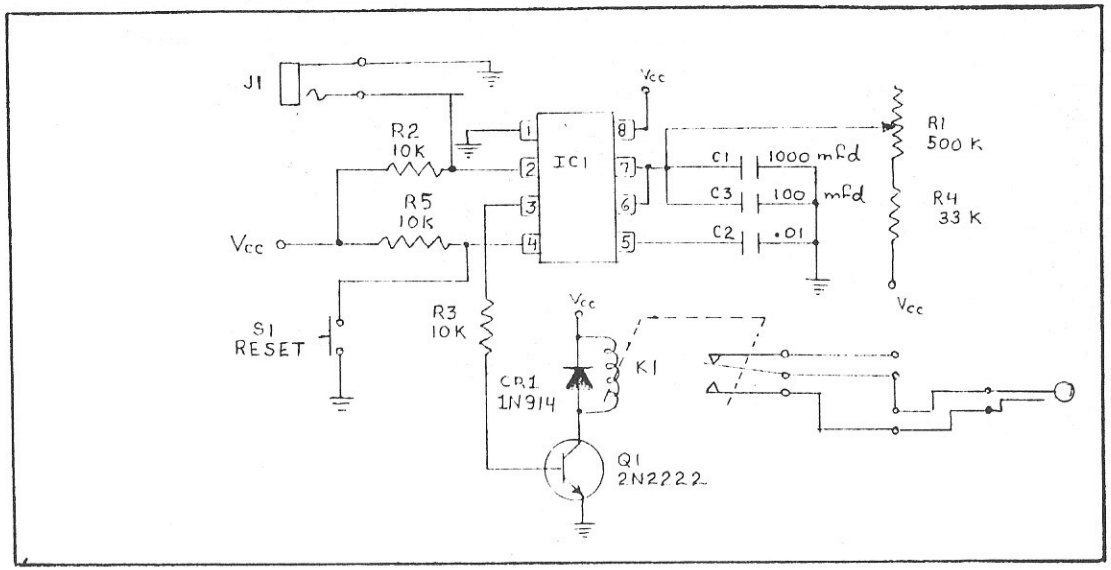

REV A 12-10-85 REVISED SCHEMATIC

	DWG NO AWK 851119-1
	TITLE SCHEMATIC DIAGRAM, TIME DELAY SWITCH INTERFACE
SCALE NONE	DESIGNER A. KRESOCK DATE 11-19-85

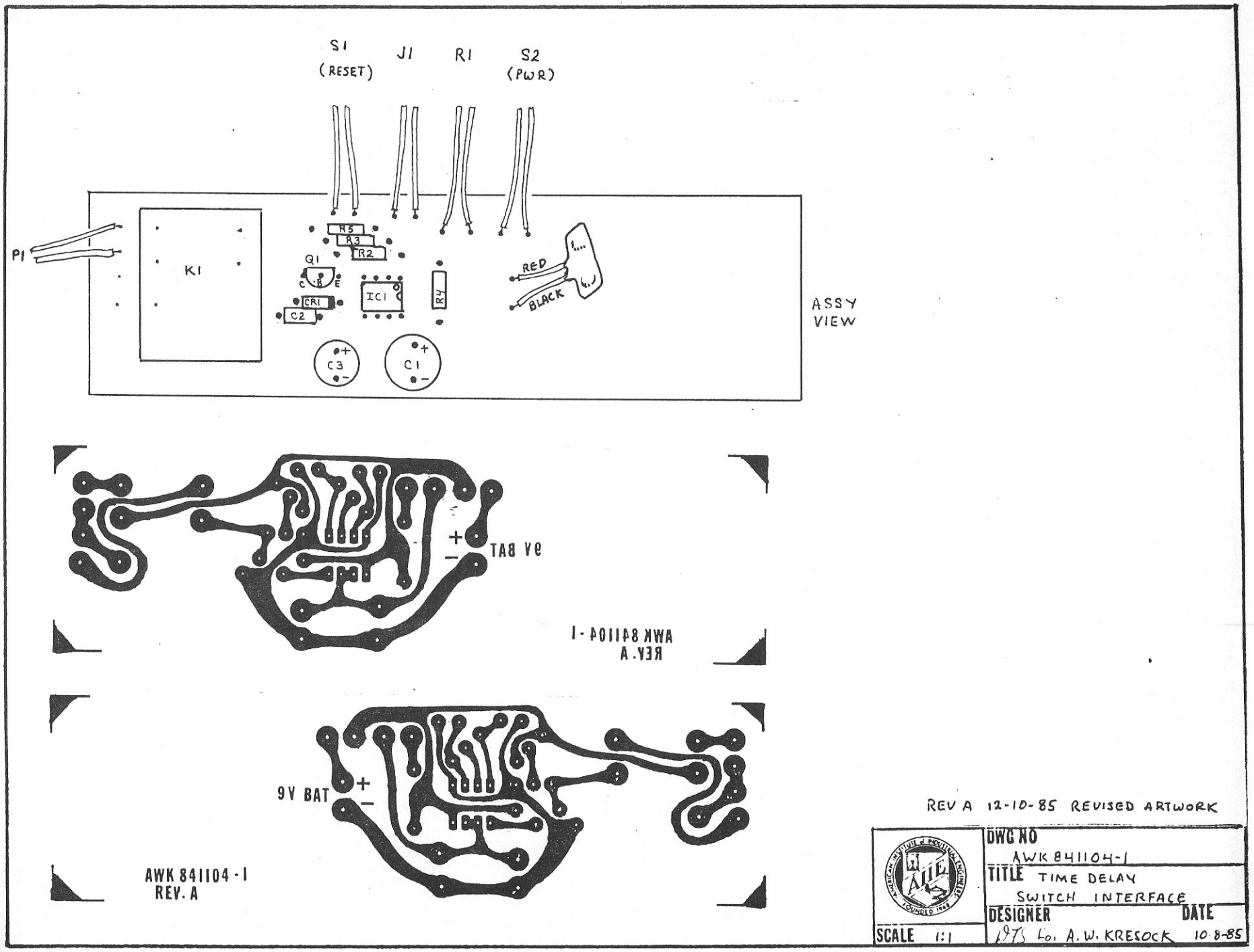
S1
(RESET)
J1
R1
S2
(PWR)
P1
K1
R5
R3
R2
Q1
C B E
CR1
C2
IC1
R4
C3
C1
RED
BLACK
ASSY
VIEW
9V BAT
AWK 841104-1
REV. A
9V BAT
AWK 841104-1
REV. A
REV A 12-10-85 REVISED ARTWORK
DWG NO
AWK 841104-1
TITLE TIME DELAY
SWITCH INTERFACE
DESIGNER
LT. A.W. KRESOCK
DATE
10-8-85
SCALE 1:1

SIMULATOR,
ELECTRIC WHEELCHAIR
TRAINING CONFIGURATION

DFS841015-1

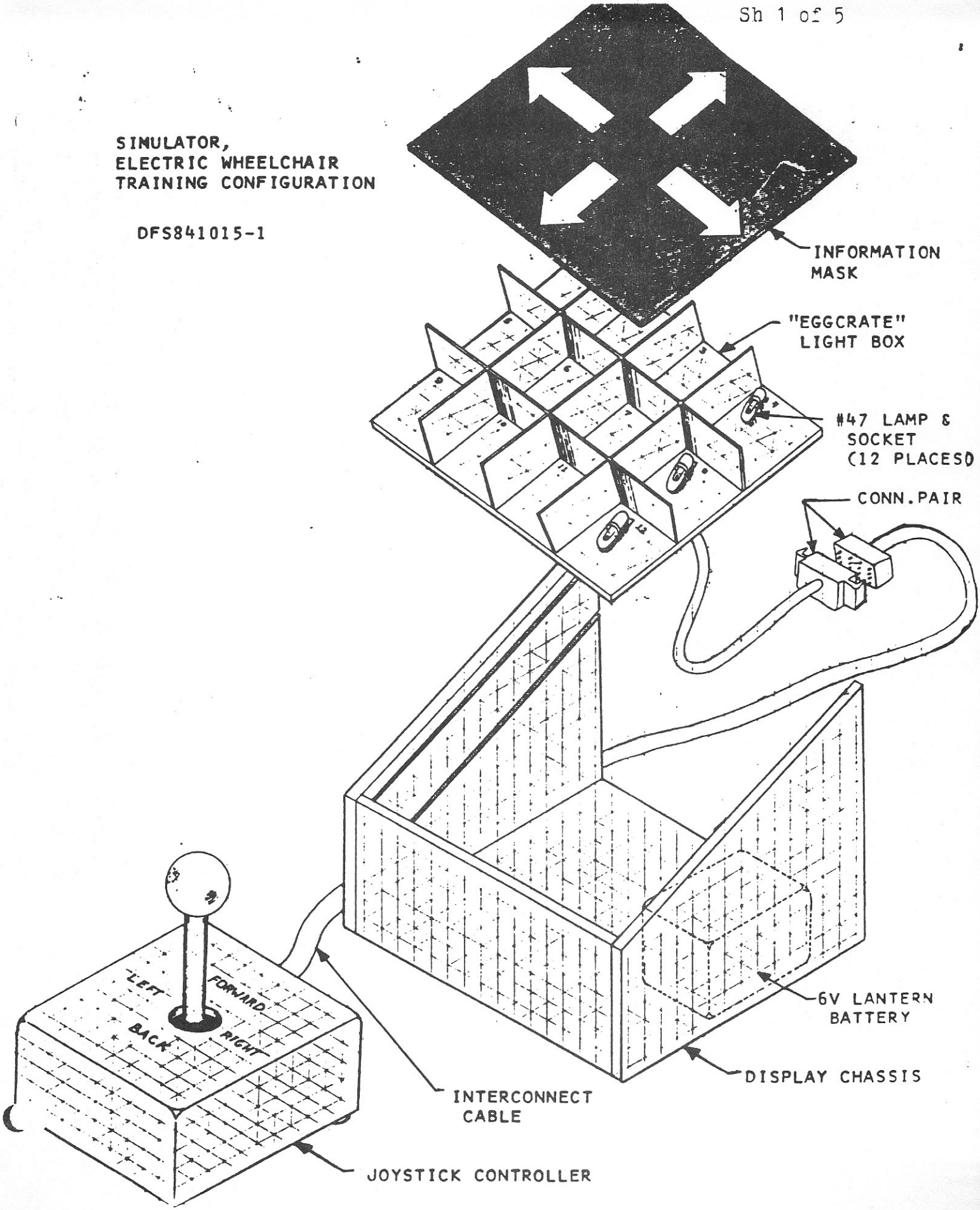

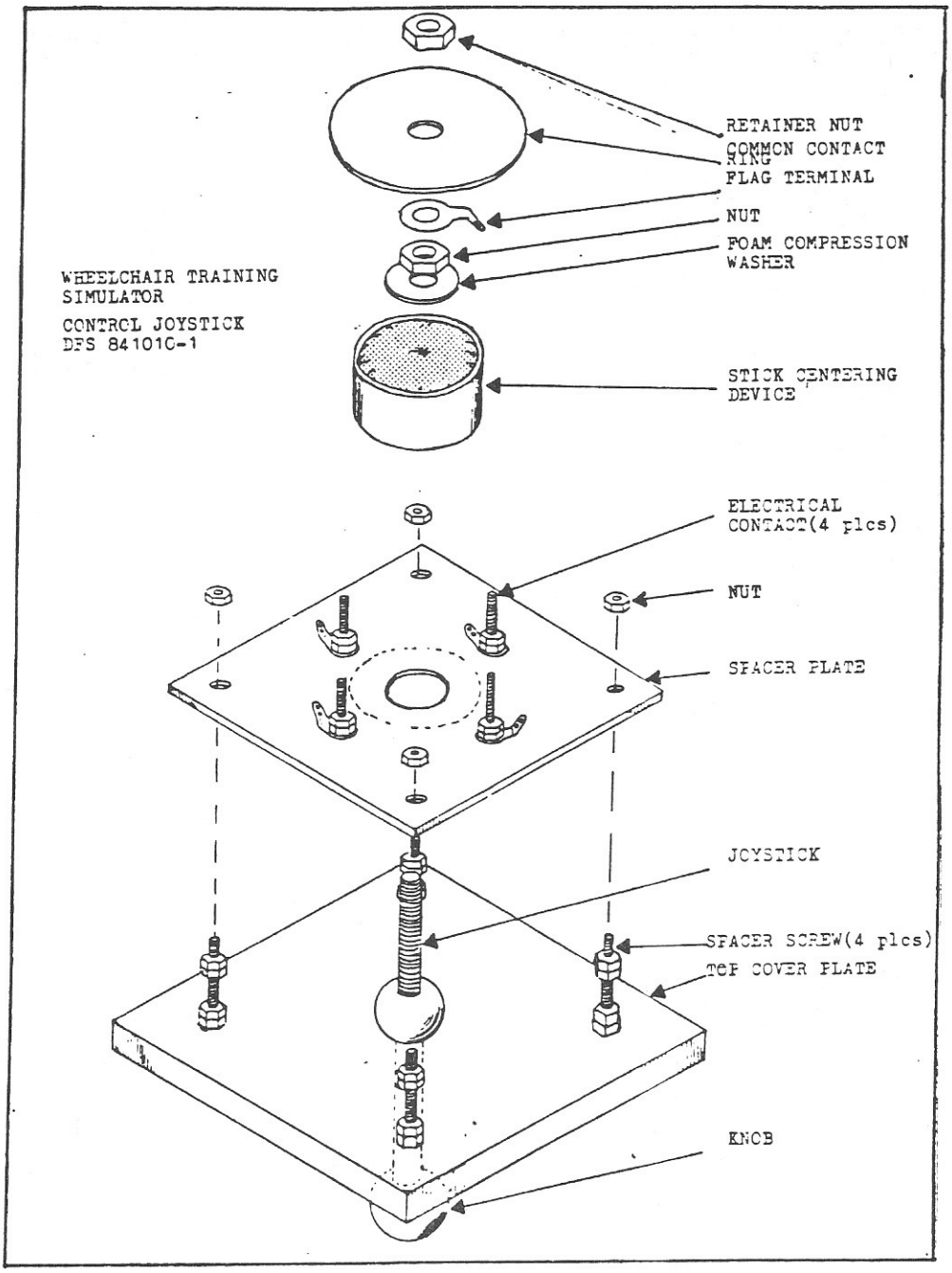
RETAINER NUT
COMMON CONTACT RING
FLAG TERMINAL
NUT
FOAM COMPRESSION WASHER
WHEELCHAIR TRAINING SIMULATOR
CONTROL JOYSTICK
DFS 841010-1
STICK CENTERING DEVICE
ELECTRICAL CONTACT(4 plcs)
NUT
SPACER PLATE
JOYSTICK
SPACER SCREW(4 plcs)
TOP COVER PLATE
KNOB

TRAINING SIMULATOR
WHEELCHAIR CONFIGURATION
SCHEMATIC

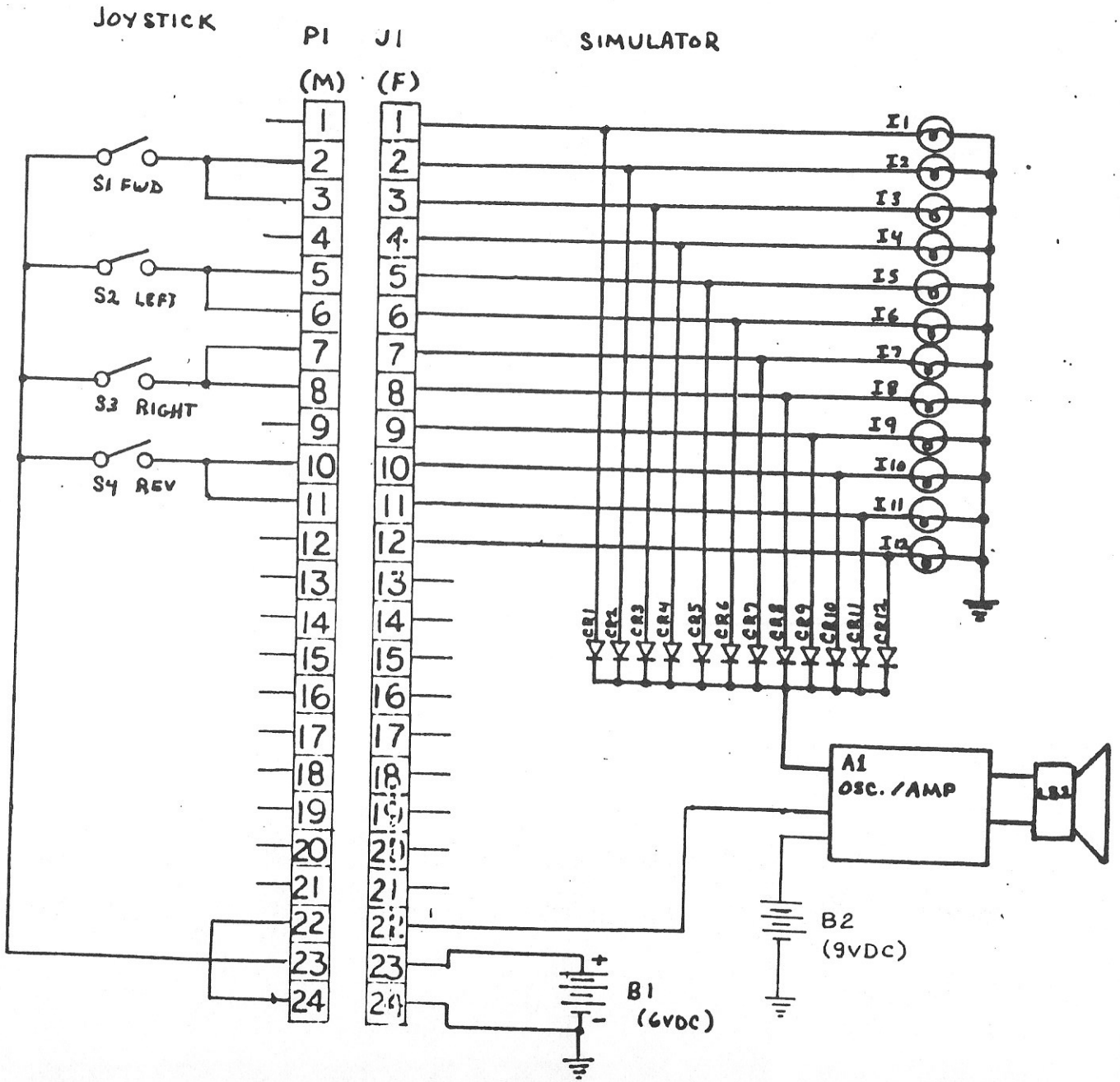

PRINTED CIRCUIT LAYOUT
AUDIO GENERATOR-WHEELCHAIR SIMULATOR

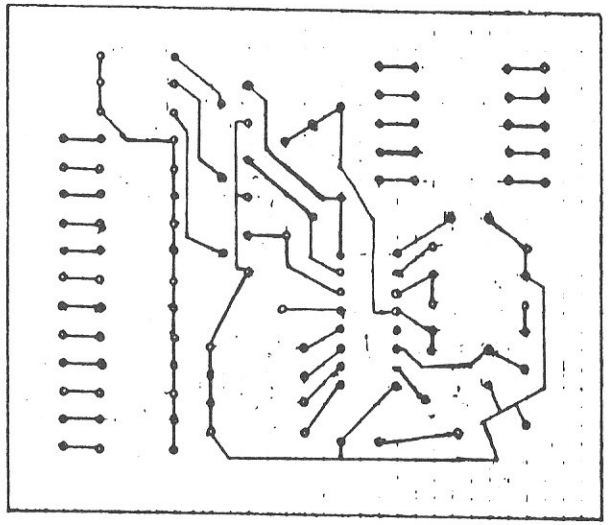

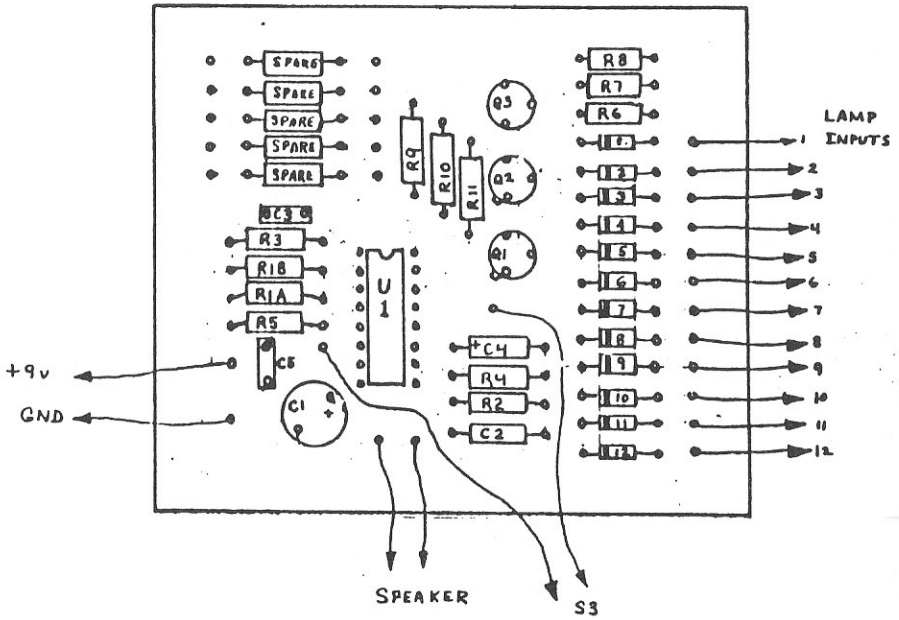

SCHEMATIC - AUDIO GENERATOR
WHEELCHAIR SIMULATOR

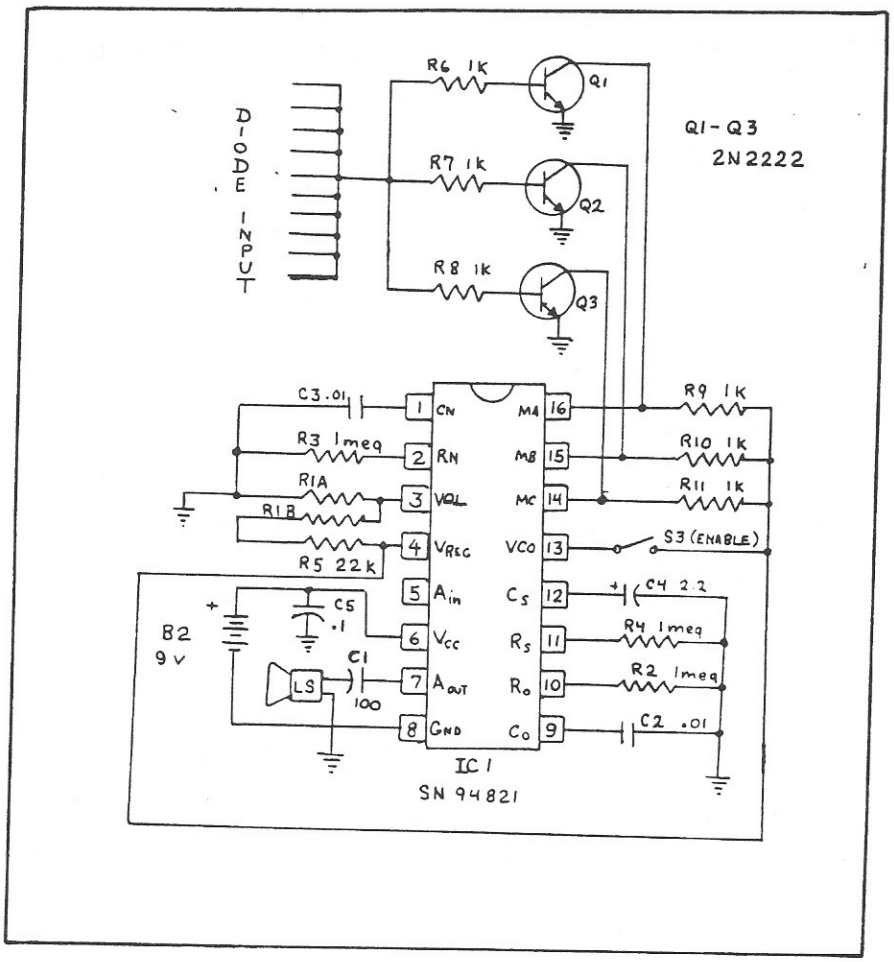

PARTS LIST: DFS 850403-1 | DESCR: PWA - STEP SEQUENCER, COMMUNICATION BD | SH 1 OF 1

IT	PART NO	DESCR	REF	QT	U/M	COMMENTS
1	.01mfd, 30v	CAPACITOR (RADIAL)	C1	1	EA.	
2	.01mfd, 30v	CAPACITOR (RADIAL)	C2	1	EA.	
3	.01 mfd, 30v	CAPACITOR (RADIAL)	C3	1	EA.	
4	2200mfd, 30v	CAPACITOR (AXIAL)	C5	1	EA.	
5	100 mfd, 15v	CAPACITOR (AXIAL)	C6	1	EA.	
6	IN914	DIODE	CR1-CR16	16	EA.	RADIO SHACK 276-1122 or EQUIV.
7	IN5197	DIODE	CR17 CR18	2	EA.	
8	NE555	MICROCIRCUIT - TIMER	IC1	1	EA	
9	SN7493A	MICROCIRCUIT - BINARY CTR	IC3	1	EA	
10	SN74154	MICROCIRCUIT - 4/16 LINE DECOD.	IC4	1	EA	
11	7805	MICROCIRCUIT - 5V REGULATOR	IC2	1	EA	
12	2N2222A	TRANSISTOR	Q17-Q18	2	EA	RADIO SHACK 276-1617 OR EQUIV.
13	2N3906	TRANSISTOR	Q1-Q16	16	EA	RADIO SHACK 276- OR EQUIV.
14	10K 1/4w 5%	RESISTOR	R1	1	EA	RADIO SHACK 271-1335 OR EQUIV.
15	10K 1/4w 5%	RESISTOR	R2	1	EA	271-1335 OR EQUIV.
16	4.7M 1/4w 5%	RESISTOR	R3	1	EA	
17	6.8K 1/4w 5%	RESISTOR	R4	1	EA	271-1333 OR EQUIV.
18	3.3K 1/4w 5%	RESISTOR	R5	1	EA	271-1328 OR EQUIV.
19	4.7K 1/4w 5%	RESISTOR	R7	1	EA	271-1330 OR EQUIV.
20	10K 1/4w 5%	RESISTOR	R11	1	EA	271-1335 OR EQUIV
21		8 POLE DIP SWITCH	S3 S4	2	EA	RADIO SHACK 275-1301 OR EQUIV
22						
23						
24						
25						
26	DFS 850403-1 (A)	CIRCUIT BOARD ASSEMBLY		REF		
27	DFS 850404-1 (A)	CIRCUIT BOARD		1		
28	DFS 850312-3 (A)	SCHEMATIC		REF		
29	470Ω 1/4w 5%	RESISTOR	R17 R32	16	EA	RADIO SHACK 271-1325 OR EQUIV.
30						
31						
32		8 PIN DIP SOCKET	—	1	EA	RADIO SHACK OR EQUIV. (FOR IC1)
33		14 PIN DIP SOCKET	—	1	EA	RADIO SHACK OR EQUIV. (FOR IC3)
34		16 PIN DIP SOCKET	—	2	EA	RADIO SHACK OR EQUIV. (FOR S3 & S4)
35		24 PIN DIP SOCKET	—	1	EA	RADIO SHACK OR EQUIV. (FOR IC4)
36	1K 1/4w 5%	RESISTOR	R6	1	EA	RADIO SHACK 271-1321 OR EQUIV.
37						

AMERICAN INSTITUTE of INDUSTRIAL ENGINEERS AIIE FOUNDED 1948

REVISION:

A. REWRITTEN W/CHANGES 6-3-85

B. CHANGED VALUE IT. 27

DESIGNER: D. F. Scudder

DATE: 6-5-85

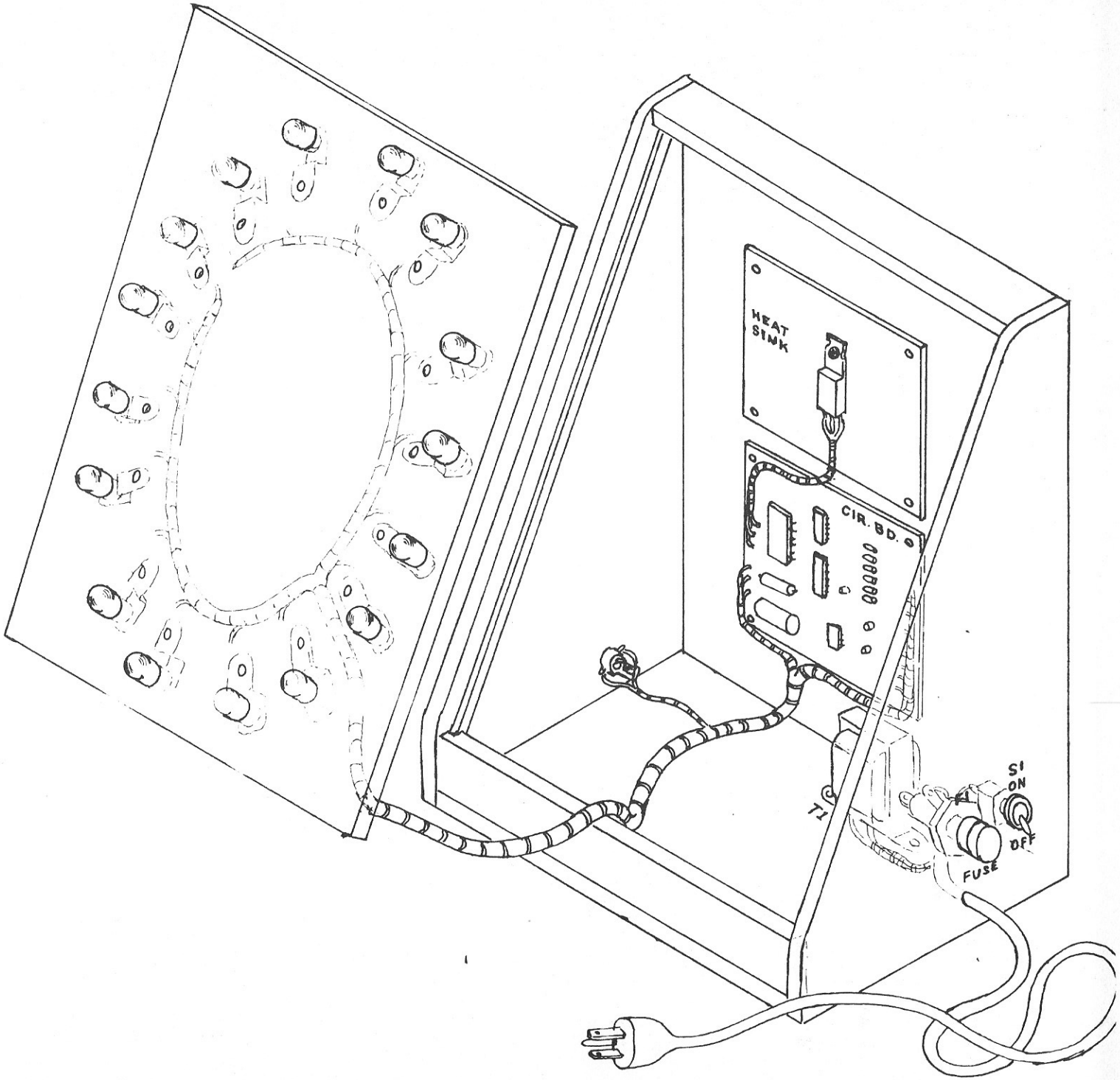

ALVIN NO. 1242 8½ X 11 35°16' ISOMETRIC

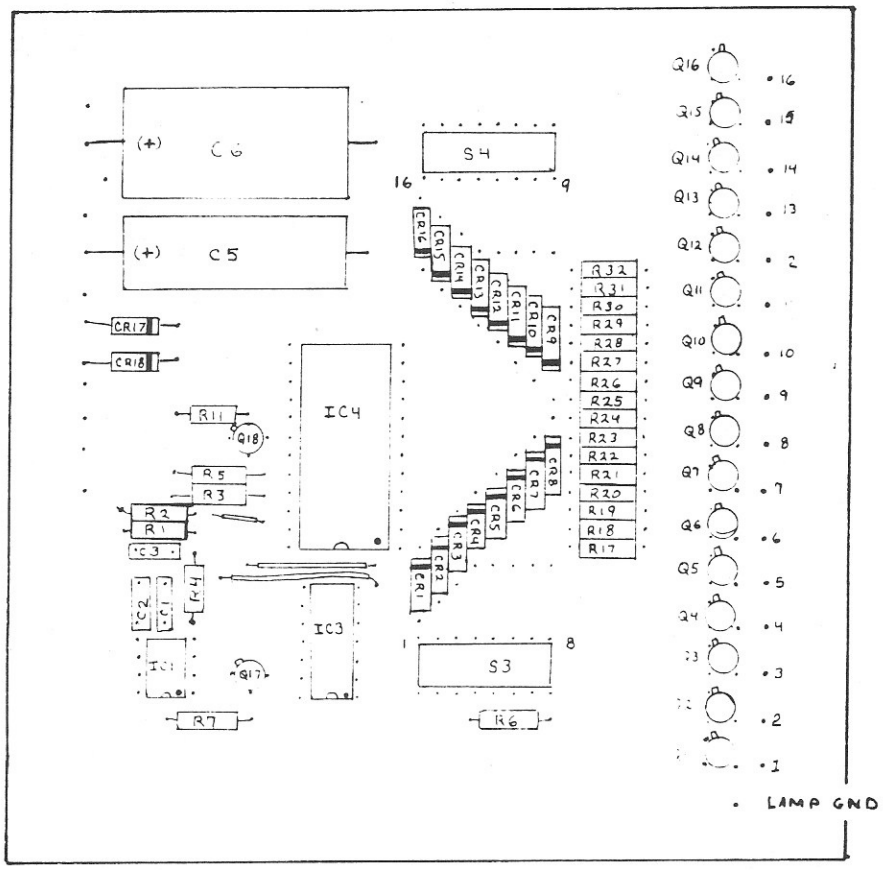

REV A - REDRAWN W/CHANGES
6-3-85 DFS

SCALE	DWG NO DFS850403-1
	TITLE P.W.A. - STEP SEQUENCER, COMMUNICATIONS BOARD
	DESIGNER D.F. Scudder DATE 6-3-85

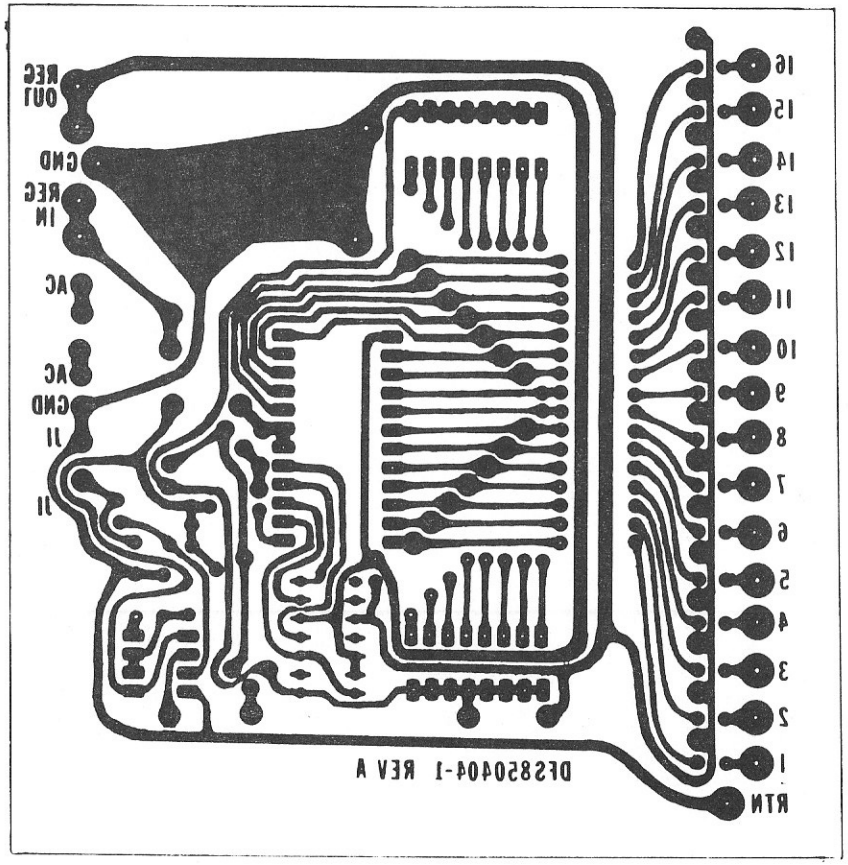

REV. A - REDRAWN WITH CHANGES
6-3-85

SCALE 1:1	DWG NO DFS 850404-1
	TITLE PRINTED WIRE BOARD - COMMUNICATIONS BOARD
	DESIGNER N F Scudder
	DATE 6-3-85

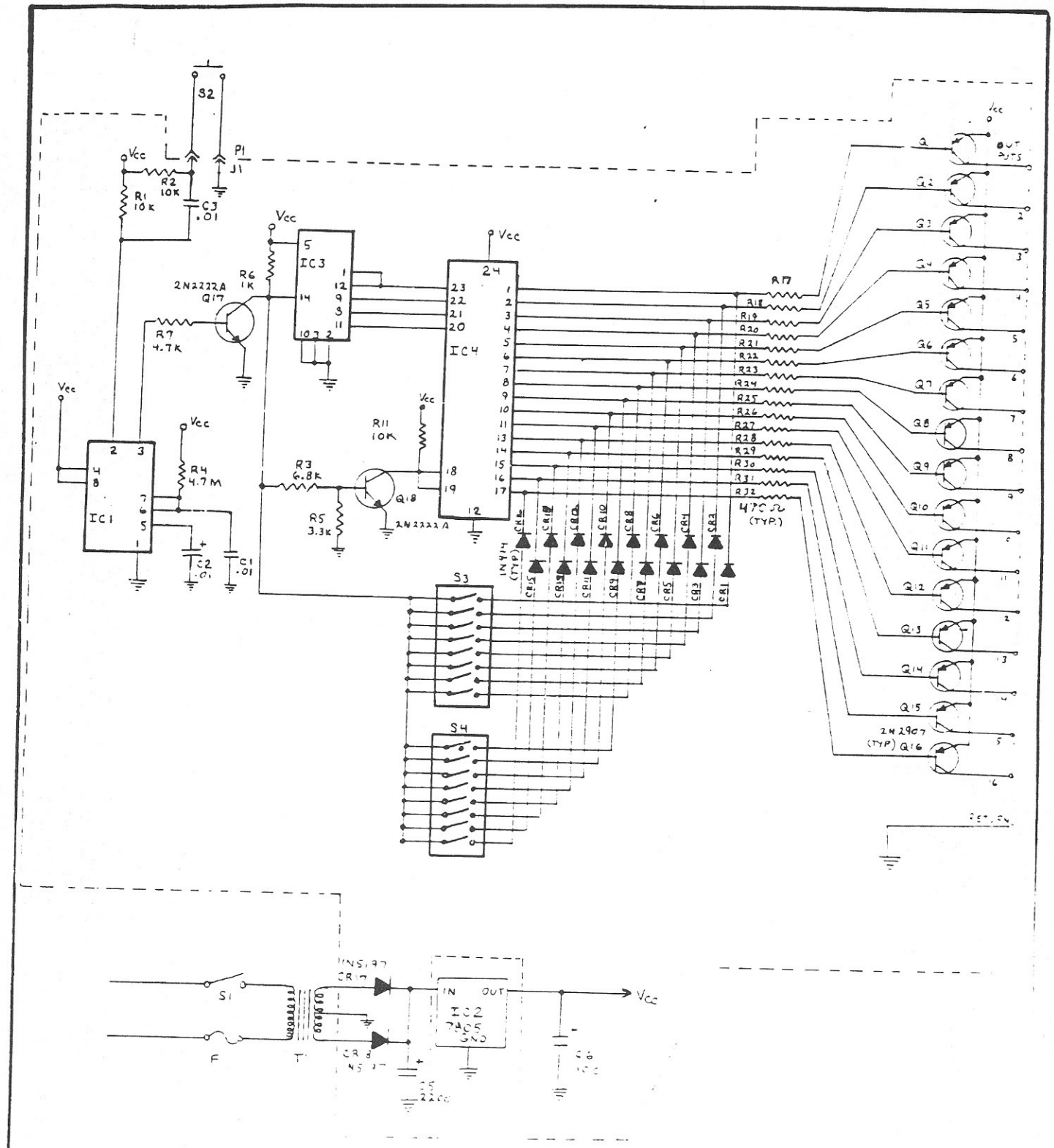

REV A · REDRAWN W/CHANGES.

SCALE N. T.	DWG NO DES 850312-3
	TITLE SCHEMATIC, STEP SEQUENCER - COMMUNICATIONS BD
	DESIGNER W. Sanders DATE
	For W.A. Peterson 6 5 85

PARTS LIST: DFS850320-1 | **DESCR:** CONDUCTIVE SOLUTION SENSOR | **SH** 1 **OF** 2

IT	PART NO	DESCR	REF	QT	U/M	COMMENTS
1	270-291	EXPERIMENTERS CABINET WITH PC BOARD		1	E	RADIO SHACK P/N (DISCARD BOARD) (A)
2	273-065	PIEZO BUZZER	SP1	1	E	RADIO SHACK P/N
3		BATTERY SNAPS		1	E	RADIO SHACK P/N OR EQUIV.
4		1/8" MINIATURE JACK	J1	1	E	RADIO SHACK P/N OR EQUIV.
5	2N2907	TRANSISTOR	Q1	1	E	
6		RESISTOR 10KΩ, 1/4 WATT	R1,2,	3	E	
7	NE555	TIMER MICROCIRCUIT	IC1	1	E	
8		SOCKET FOR IC1		1	E	
9	DFS850319-1	SCHEMATIC & DES. NOTES	REF			
10	DFS850320-2	PWA	REF			(PART OF IT. 1)
11	DFS850319-2	GRID RESISTOR	R4	1	E	
12	DFS850320-1	ASSY	REF	1	E	
13		1/8" MINIATURE PLUG	P1	1	E	RADIO SHACK P/N OR EQUIV.
14	DFS850425-1	PWB	A1	1	E	
15		RESISTOR 47K, 1/4 W	R3	1	E	

AMERICAN INSTITUTE of INDUSTRIAL ENGINEERS AIIE FOUNDED 1948

REVISION:
(A) CHANGED TO PWB, 4-27-85
(B) VALUE CHANGE, R3, 9-8-85

DESIGNER D. F. Scudder **DATE** 3-26-85

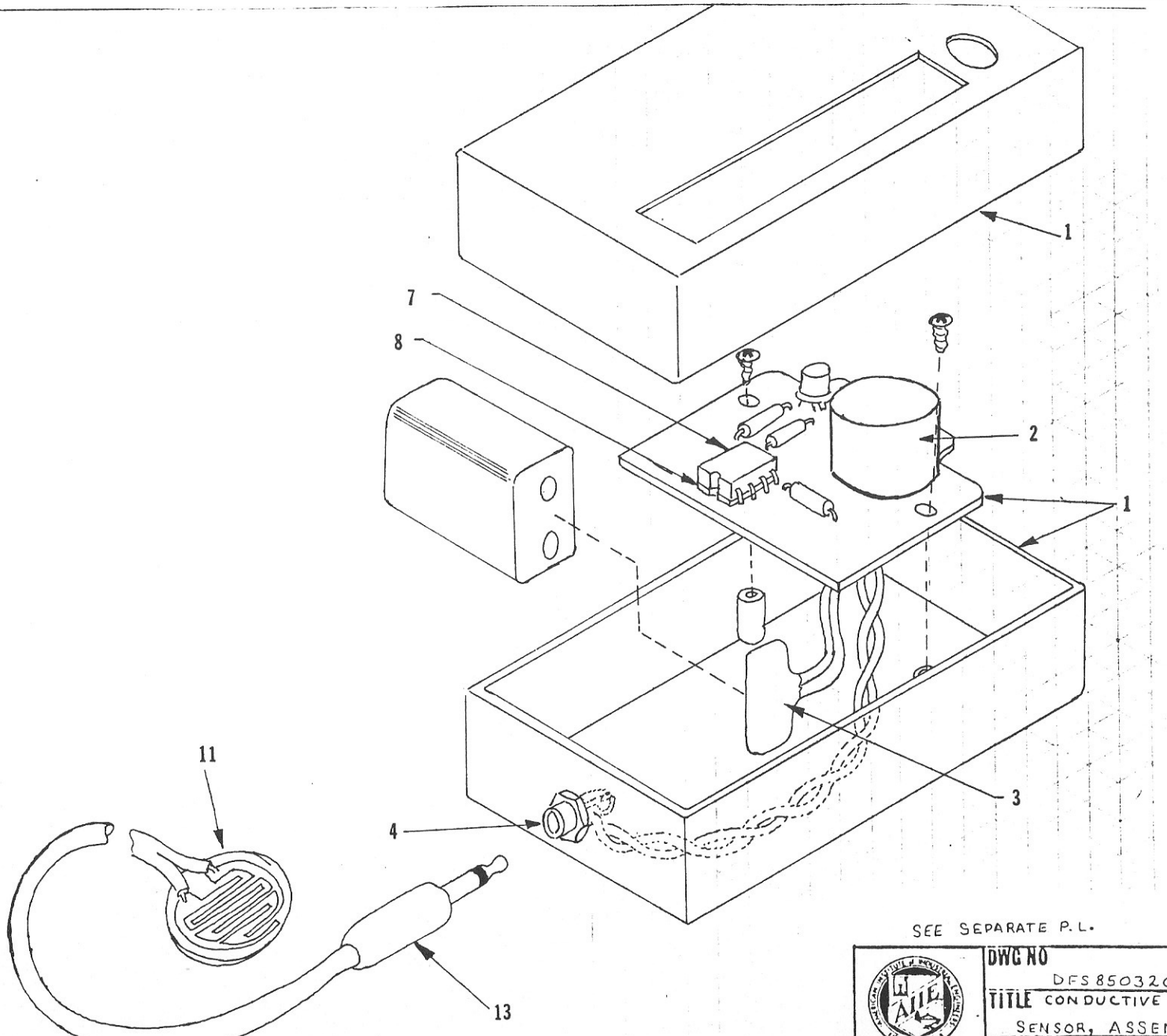

SEE SEPARATE P.L.

SCALE NONE	DWG NO DFS 850320-1
	TITLE CONDUCTIVE SOLUTION SENSOR, ASSEMBLY
	DESIGNER N. F. Scudder
	DATE 3-26-85

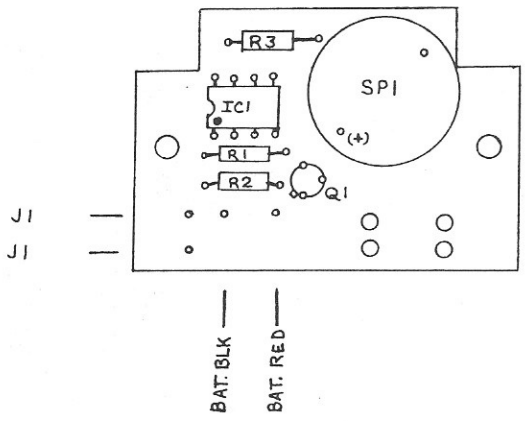

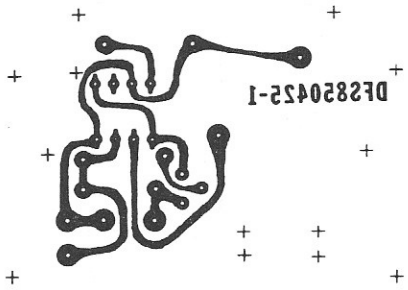

SCALE 1/1	DWG NO DFS850425-1
	TITLE PRINTED WIRE BOARD; CONDUCTIVE SOLUTION DETECTOR
	DESIGNER D.F. Scudder DATE 4-27-85

DESIGN NOTES

APPLICATION: THE CONDUCTIVE SOLUTION SENSOR CIRCUIT WAS DESIGNED TO SOUND A CONTINUOUS BEEP WHEN WETNESS IS DETECTED IN A DIAPER. THIS ADDRESSES THE PROBLEM OF A NINE YEAR OLD GIRL, PARALYZED FROM THE WAIST DOWN AND UNABLE TO FEEL THE WETNESS.

THE DEVICE WAS PACKAGED IN A READILY AVAILABLE EXPERIMENTERS BOX (WITH PRINTED WIRE BOARD), SMALL ENOUGH TO DROP IN A POCKET. THE SENSOR LEADS CAN RUN BENEATH CLOTHING TO BE PLACED IN THE LINING OF A DISPOSABLE DIAPER.

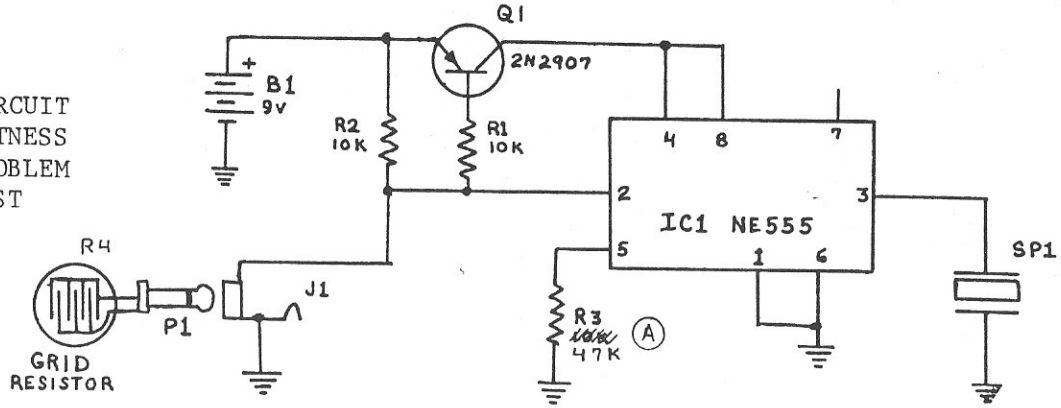

CIRCUIT DESCRIPTION: WITH NO MOISTURE APPLIED, THE GRID RESISTOR IS AN OPEN CIRCUIT. NO BASE CURRENT CAN FLOW IN TRANSISTOR Q1 AND IT IS HELD OFF. WITH MOISTURE APPLIED, ITS RESISTANCE DROPS, TURNING ON Q1. Q1 APPLIED 9V TO THE POWER PINS OF IC1.

THE OUTPUT OF IC1 (PIN 3) REMAINS OFF UNTIL THE VOLTAGE AT PIN 2 GOES BELOW A THRESHOLD LEVEL SET BY RESISTOR R3. THE GRID RESISTOR AND R1/R2 FORM A VOLTAGE DIVIDER. WHEN THE VOLTAGE AT PIN 2 BELOW THE THRESHOLD, PIN 3 WILL GO TO 9 VOLTS AND THE PIEZO BEEPER IS ACTIVATED.

IF LOWER MOISTURE SENSITIVITY IS DESIRED, DECREASE R3, BUT NOT BELOW 100 OHMS. RAISE R3 TO INCREASE SENSITIVITY. FOR MAXIMUM SENSITIVITY, REMOVE R3.

INSTRUCTIONS FOR USE:

PLACE THE SENSOR DEEP INSIDE THE LOWEST PART OF THE DIAPER. INSERT THE PLUG INTO THE DETECTOR BOX. WHEN THE DIAPER BECOMES WET, THE ALARM WILL SOUND.

AFTER EACH USAGE, RINSE THE SENSOR IN WARM WATER AND DRY BY PATTING WITH A PAPER TOWEL.

REV A CHANGED R3 9-8-85

AIIE	DWG NO DFS850319-1
	TITLE CONDUCTIVE SOLUTION DETECTOR
SCALE N/A	DESIGNER Allen F Rayman DATE 3-19-85

PARTS LIST: DFS 850319-2

DESCR: "SPEEDBALL" SLOTRACE CONTROLLER

SH 1 OF 1

IT	PART NO	DESCR	REF	QT	U/M	COMMENTS
1	DFS850318-1	CABINET		1	E	
2	DFS850316-1	CIR CD		1	E	
3	DFS850316-2	PUSH BUTTON		8	E	
4		PUSH PIN		8	E	STANDARD OFFICE PUSH PIN
5	271-132	RESISTOR 10Ω 10W	R1-R6	6	E	RADIO SHACK P/N
6		1/8" MIN PLUG/JACK SET		1	PK	RADIO SHACK P/N
7		FOAM RUBBER		2	E	1/2" x 1" x 5"
8	DFS850316-3	SCHEMATIC			REF	

AMERICAN INSTITUTE of INDUSTRIAL ENGINEERS AIIE FOUNDED 1948

REVISION:

DESIGNER: D7 Sewecker

DATE: 3/21/85

DESIGN NOTES

SPEEDBALL CONTROLLER

The problem to be solved was a new controller for a childs' slot car race set. The eight-year-old involved is a Cerebral Palsey victim who lacks the motor control to enable him to hold and operate the standard "pistol grip" controller typical to these sets. Discussions with the boys' parents revealled that he was able to operate large push-buttons.

A design goal was set to design a controller that the child could operate, but still have the set operable by his non-handicapped siblings. A two channel push button controller was designed, utilizing a step function resistance controller, resistance values being picked by measuring the pistol grip controller. Four push button positions: "slow", "medium", "fast" and "race"; connect 30Ω , 20Ω , 10Ω , or 0 Ω to the circuit in the slot race set.

The existing cables of the slot car set were cut, and reconnected with in-line miniature jacks, allowing either standard controllers or the "Speedball" to be connected to either or both lanes. This interchangibility feature will allow the child to play with or compete against the non-handicapped player.

A simple printed circuit board was used for common connections and contact pads, although pennies cemented in position would have performed as well. Pushbuttons were turned from wood on a lathe, with a hole to accept a trimmed-down office push pin contact. The push button assembly is spring loaded away from the circuit board with foam rubber strips, the resiliency of the foam being selected for the desired amount of "push" .

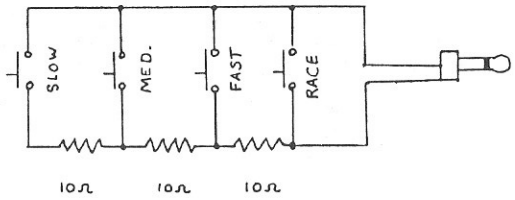

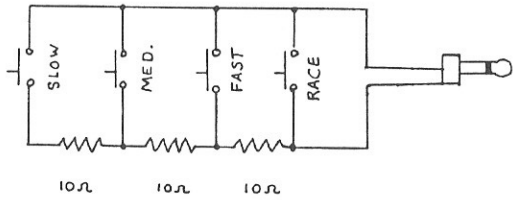

SCALE NONE	DWG NO DFS8503-16
	TITLE SCHEMATIC, SPEEDBALL SLOTRACE CONTR.
	DESIGNER D Scudder DATE 3/21/85

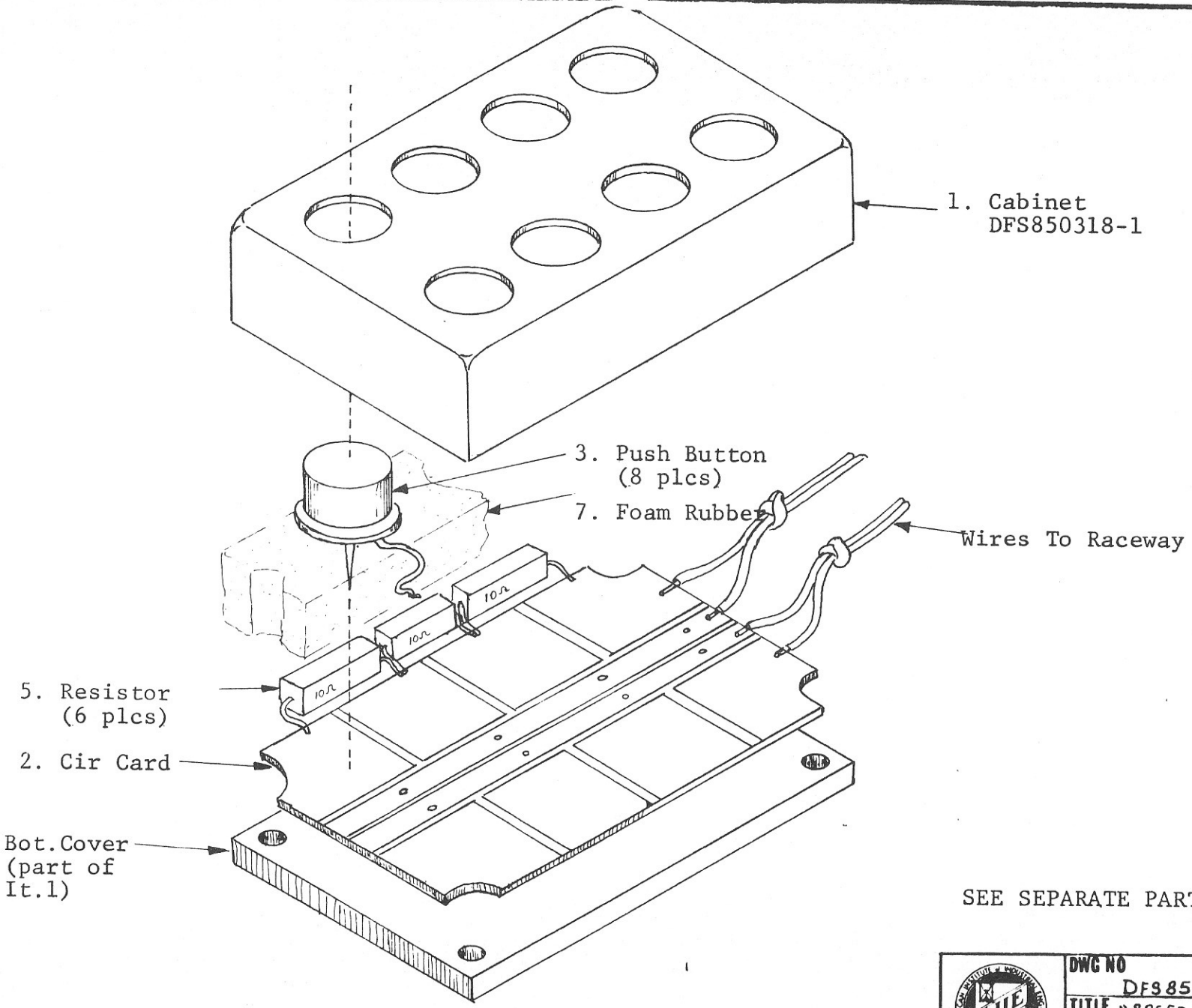

SEE SEPARATE PARTS LIST.

SCALE NONE	DWG NO DFS850319-2
	TITLE "SPEED BALL" SLOT RACER CONTROLLER
	DESIGNER D.F. Scudder
	DATE 3-19-85

ALVIN NO. 1242 – 8½ X 11 35°16′ ISOMETRIC

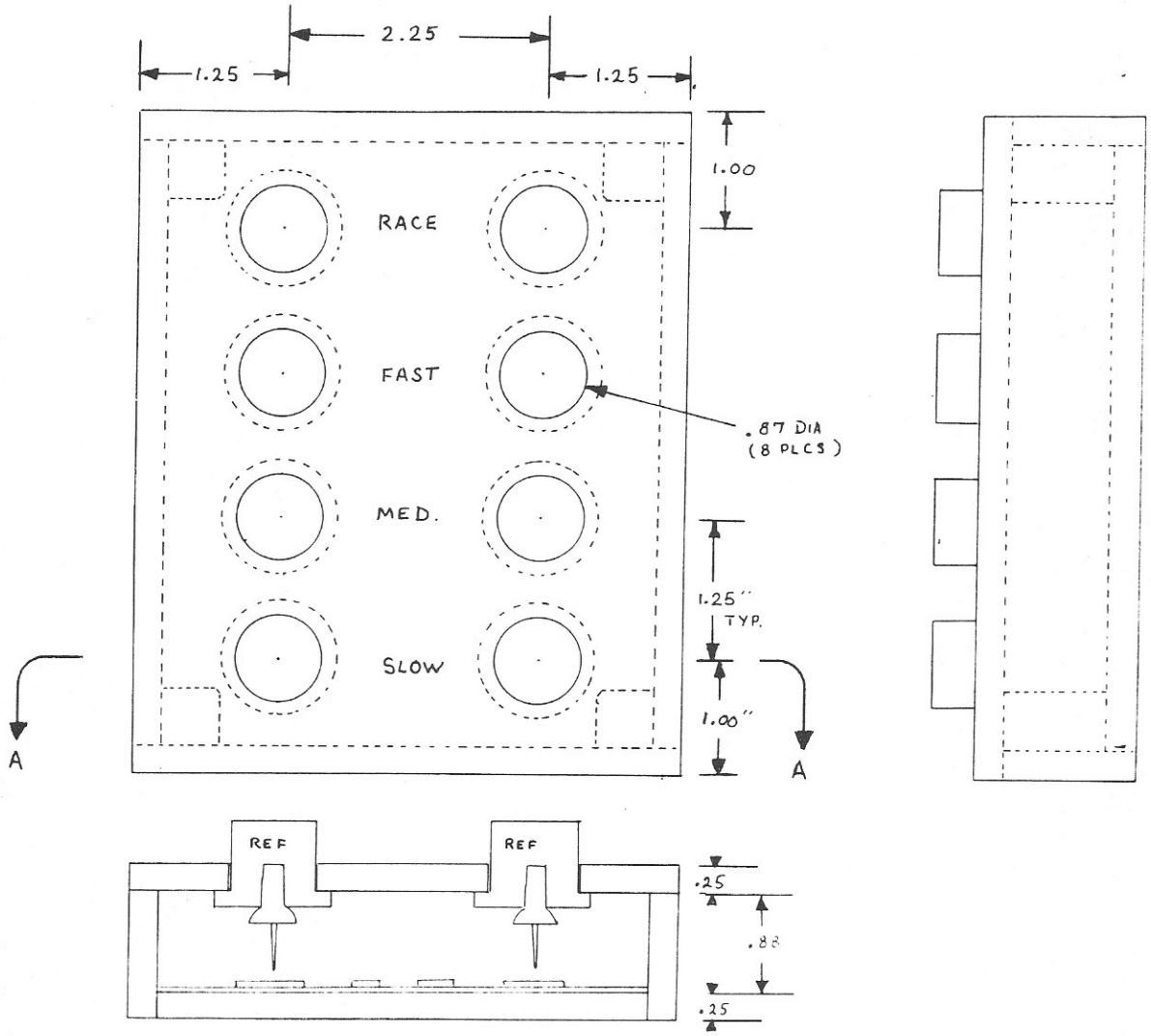

MAT'L WOOD

NOTES:

1. CABINET MADE OF PLYWOOD OR MILLED STRIPWOOD
2. BOTTOM TO BE REMOVABLE
3. GLUE ALL JOINTS
4. VARNISH OR PAINT TO SUIT

SEE SEPARATE P/L

SCALE	DWG NO DFS 850318-1
	TITLE CABINET, "SPEEDBALL" RACE SET CONTROLLER
	DESIGNER N.F. Scudder — DATE 3-21-85

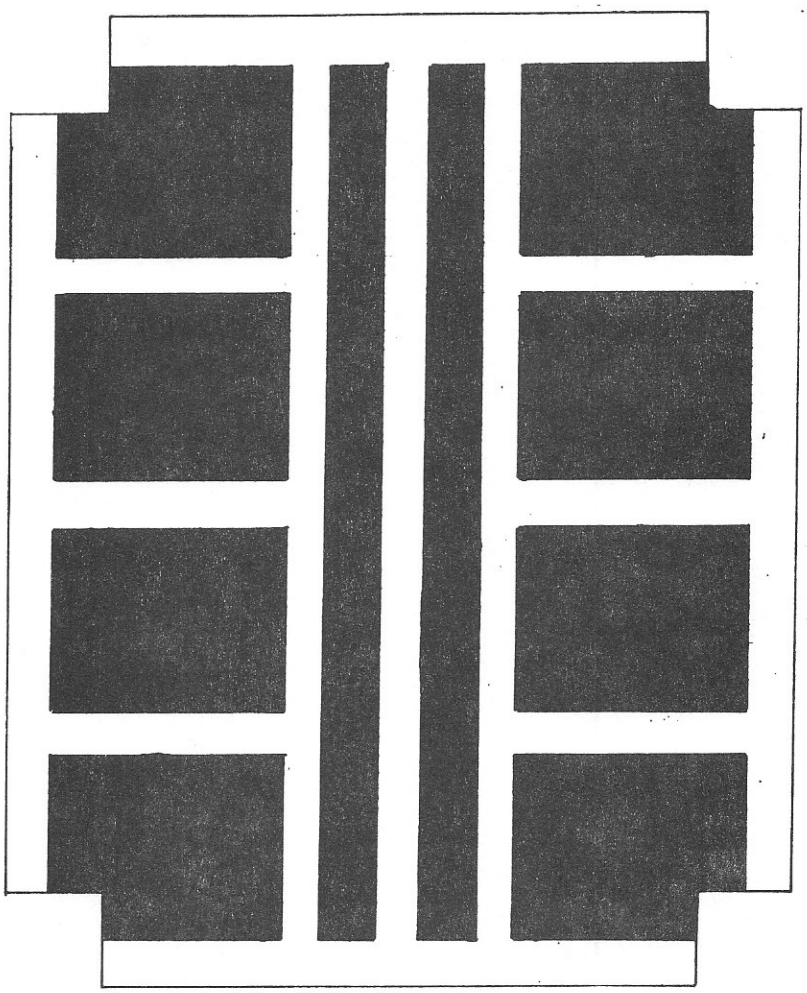

AMERICAN INSTITUTE OF INDUSTRIAL ENGINEERS AIIE FOUNDED 1948	DWG NO DES 870316-1
	TITLE [illegible] SPEEDBALL CONTROLLER
SCALE	DESIGNER [illegible] DATE 3-22-85

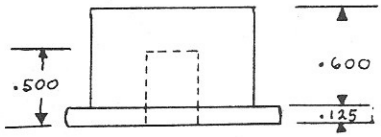

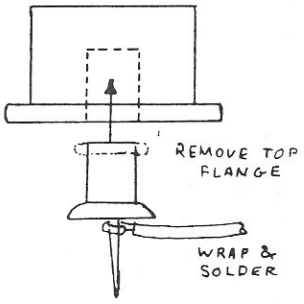

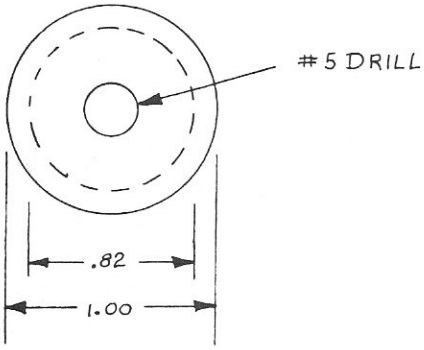

AIIE AMERICAN INSTITUTE OF INDUSTRIAL ENGINEERS FOUNDED 1948	DWG NO [illegible]
	TITLE PUSH BUTTON, "SCREEN SAVE" TIME CONTROLLER
SCALE [illegible]	DESIGNER [illegible] DATE [illegible]-85

PARTS LIST: DFS 850809-1 | DESCR: EVENT COUNTER | SH 1 OF 1

IT	PART NO	DESCR	REF	QT	U/M	COMMENTS	
1	7400	MICROCIRCUIT	IC4	1	EA		RADIO SHACK 276-1801 OR EQUIV.
2	7490	MICROCIRCUIT	IC1	1	EA	(SEE NOTE 1)	RADIO SHACK 276-1808 OR EQUIV.
3	7447	MICROCIRCUIT	IC2	1	EA	(SEE NOTE 1)	RADIO SHACK 276-1805 OR EQUIV.
4		7-SEGMENT DISPLAY	IC3	1	EA	(SEE NOTE 1)	RADIO SHACK 276-053 OR EQUIV.
5	1N4001	DIODE	CR1	1	EA		RADIO SHACK 276-1101 OR EQUIV.
6	1N4148	DIODE	CR2	1	EA		RADIO SHACK 276-1122 OR EQUIV.
7		DPDT 5 VOLT RELAY	K1	1	EA		RADIO SHACK 275-215 OR EQUIV.
8		SPST SWITCH	S1	1	EA		RADIO SHACK 275-612 OR EQUIV.
9	330Ω, 1/4 W, 5%	RESISTOR	R1-R7	7	EA	(SEE NOTE 1)	RADIO SHACK 271-1315 OR EQUIV.
10	4.7K, 1/4 W, 5%	RESISTOR	R8, R9	2	EA		RADIO SHACK 271-030 OR EQUIV.
11	.1 mfd	CAPACITOR	C1	1	EA	(SEE NOTE 1)	RADIO SHACK 272-135 OR EQUIV.
12	.1 mfd	CAPACITOR	C2 C6	2	EA		RADIO SHACK 272-135 OR EQUIV.
13	10 mfd	CAPACITOR	C7	1	EA		RADIO SHACK 272-1025 OR EQUIV.
14	INPUT	1/8" MINIATURE JACK	J1	1	EA		RADIO SHACK 274-251 OR EQUIV.
15	OUTPUT	1/8" MINIATURE PLUG	P1	1	EA		RADIO SHACK 274-286 OR EQUIV.
16		6 V LANTERN BATTERY	B1	1	EA		RADIO SHACK 23-006 OR EQUIV.
17		SOCKET FOR IC4 (14 PIN DIP)		1	EA		RADIO SHACK 276-1999 OR EQUIV.
18		SOCKET FOR K1 (16 PIN DIP)		1	EA		RADIO SHACK 276-1998 OR EQUIV.
19		SOCKET FOR IC1, IC3 (14 PIN DIP)		2	EA	(SEE NOTE 1)	RADIO SHACK 276-1999 OR EQUIV.
20		SOCKET FOR IC2 (16 PIN DIP)		1	EA	(SEE NOTE 1)	RADIO SHACK 276-1998 OR EQUIV.
21	DFS 850424-1	PRINTED WIRE BOARD	A1	1	EA		
22	DFS 850811-1	CIR. CARD ASSY	A1	REF.			
23	AWK 850403-2	SCHEMATIC		REF			

AMERICAN INSTITUTE of INDUSTRIAL ENGINEERS AIIE FOUNDED 1948

NOTE 1: FOR 0-9 COUNTER, USE STATED QUANTITY.
FOR 0-99 COUNTER, DOUBLE STATED QUANTITY.
FOR 0-999 COUNTER, TRIPLE STATED QUANTITY.

REVISION:

DESIGNER: [illegible]

DATE: 8-11-85

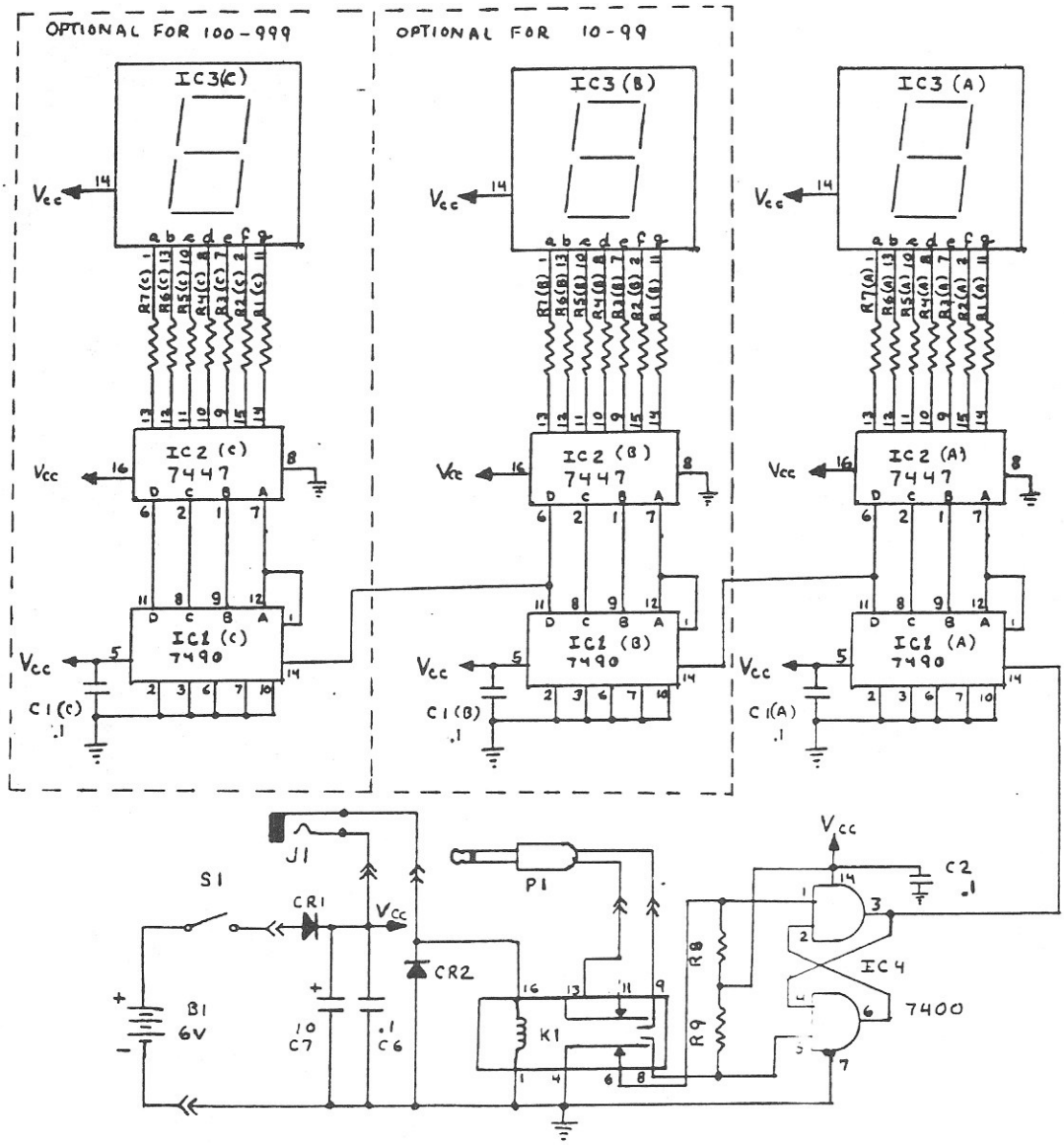

DWG NO	AWK 850403-2
TITLE	SCHEMATIC, EVENT COUNTER
DESIGNER	Allan Kresock
DATE	8-11-85
SCALE	

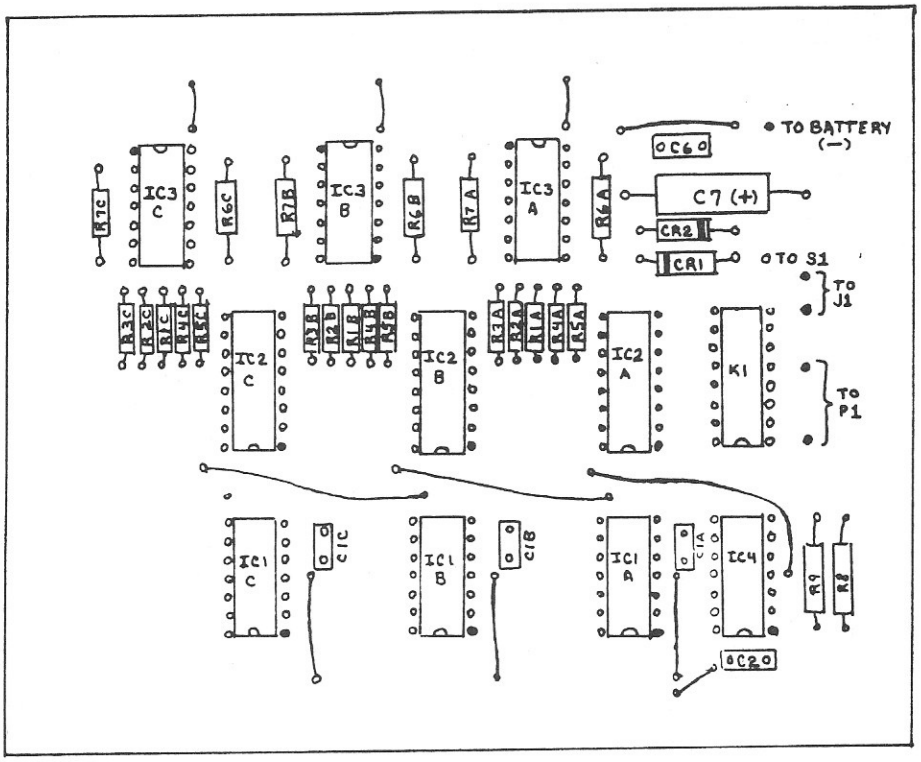

SCALE	DWG NO DFS 850811-1
	TITLE CIR. CARD ASSY, EVENT COUNTER
	DESIGNER D. F. Scudder DATE 8-11-85

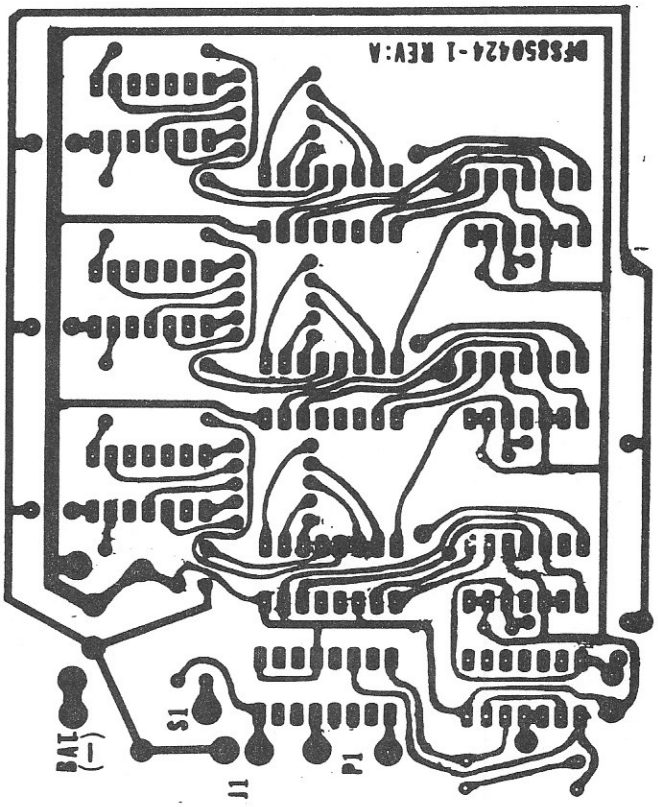

REV A 8-10-85

AIIE	DWG NO DFS 850424-1
	TITLE PRINTED WIRE BOARD, EVENT COUNTER
SCALE	DESIGNER N.T. Scudder DATE 8-10-85

PARTS LIST: DFS 850428-1 | **DESCR:** BI-STABLE SWITCHING CIRCUIT (RELAY) | **SH** 1 **OF** 1

IT	PART NO	DESCR	REF	QT	U/M	COMMENTS
1	NE555	MICRO CIRCUIT	IC1	1	E	RADIO SHACK # 276-1723 or Equivilent
2	4013	MICRO CIRCUIT DUAL D FLIP FLOP	IC2	1	E	RADIO SHACK #276-2413 or Equivilent
3	2N 2222	TRANSISTOR	Q1	1	E	
4	10K 1/4 W	RESISTOR	R1	1	E	
5	1 M 1/4 W	RESISTOR	R2	1	E	
6	3K 1/4 W	RESISTOR	R3	1	E	
7	10K 1/4 W	RESISTOR	R4	1	E	
8	10K 1/4 W	RESISTOR	R5	1	E	
9	2K 1/4 W	RESISTOR	R6	1	E	
10	47K 1/4 W	RESISTOR	R7	1	E	
11	390 Ω 1/4 W	RESISTOR	R8	1	E	
12	.01 15V	CAPACITOR	C1	1	E	RADIO SHACK # 272-1065 or EQUIVILENT
13	1.0 15V	CAPACITOR	C2	1	E	
14	1.0 15V	CAPACITOR	C3	1	E	
15		JACK 1/8" MIN. (OPEN CIR)	J1	1	E	RADIO SHACK 274-251 or EQUIVILENT
16		PLUG 1/8" MIN.	P1	1	E	RADIO SHACK 274-286 or EQUIVILENT
17	1N4148	DIODE	CR1	1	E	(EQUIV: 1N914, 1N645)
18	276-1995	8 PIN DIP SOCKET		1	E	RECOMMENDED – NOT ESSENTIAL (RAD. SHACK #)
19	276-1999	14 PIN DIP SOCKET		1	E	" " " " " " "
20	276-1998	16 PIN DIP SOCKET		1	E	" " " " " " "
21		9V BATTERY SNAPS		1	E	RADIO SHACK # 270-325 OR EQUIVILENT
22	270-221	CABINET		1	E	(RADIO SHACK #)
23		PRINTED WIRING BOARD		1	E	
24		ON-OFF SWITCH	S1	1	E	RADIO SHACK # 275-622 OR EQUIVILENT
25		ATTENDENT PUSH BUT. (N.O.)	S2	1	E	RADIO SHACK # 275-1547 OR EQUIVILENT
26	275-004	RELAY	K1	1	E	RADIO SHACK #

AMERICAN INSTITUTE of INDUSTRIAL ENGINEERS AIIE FOUNDED 1948

REVISION:

DESIGNER D.T. Scudder

DATE 4-27-85

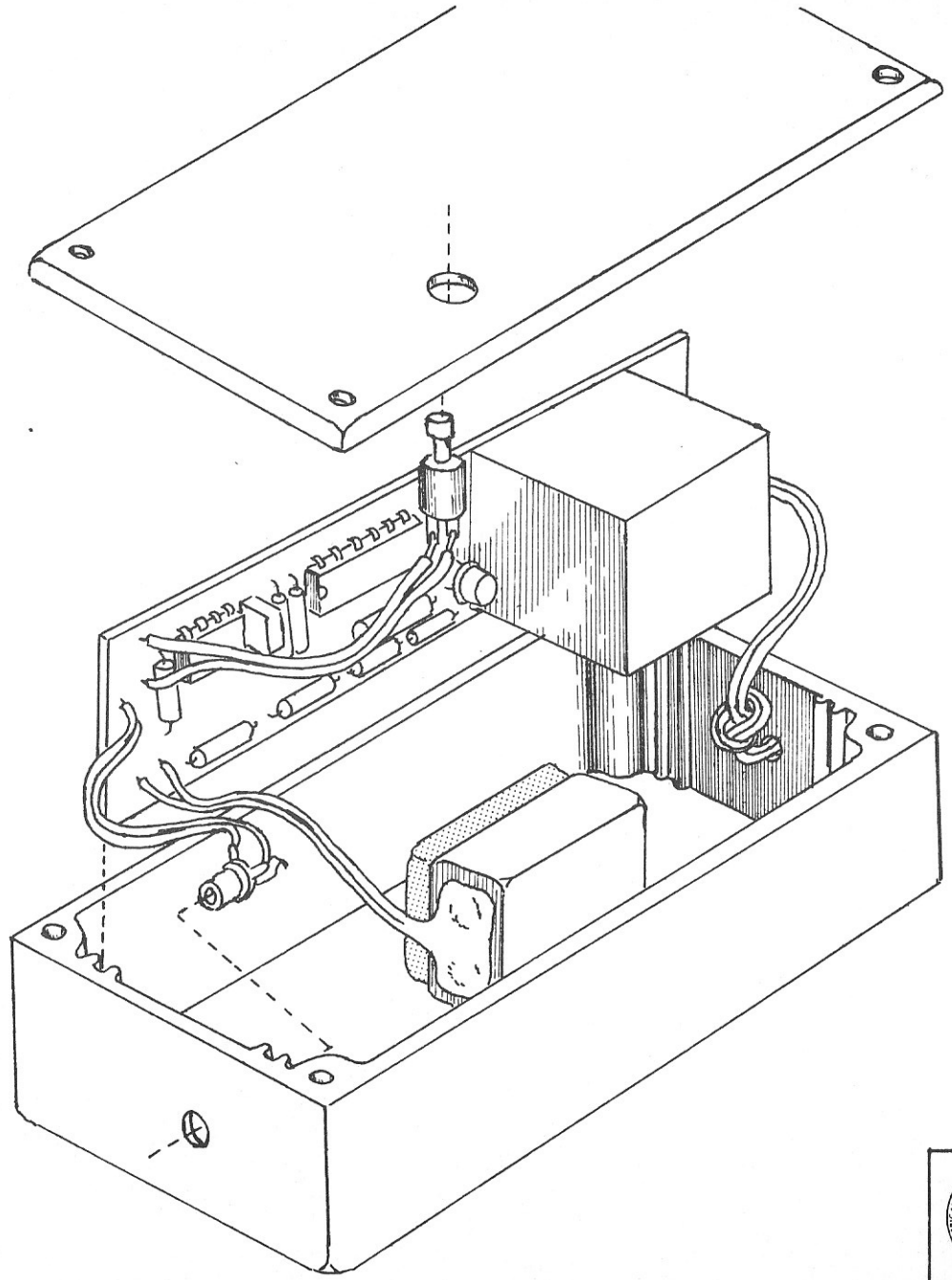

SCALE NONE	DWG NO DFS 850426-1
	TITLE ASSY, BI-STABLE SWITCH, (RELAY)
	DESIGNER W A Scudder
	DATE 6/10/85

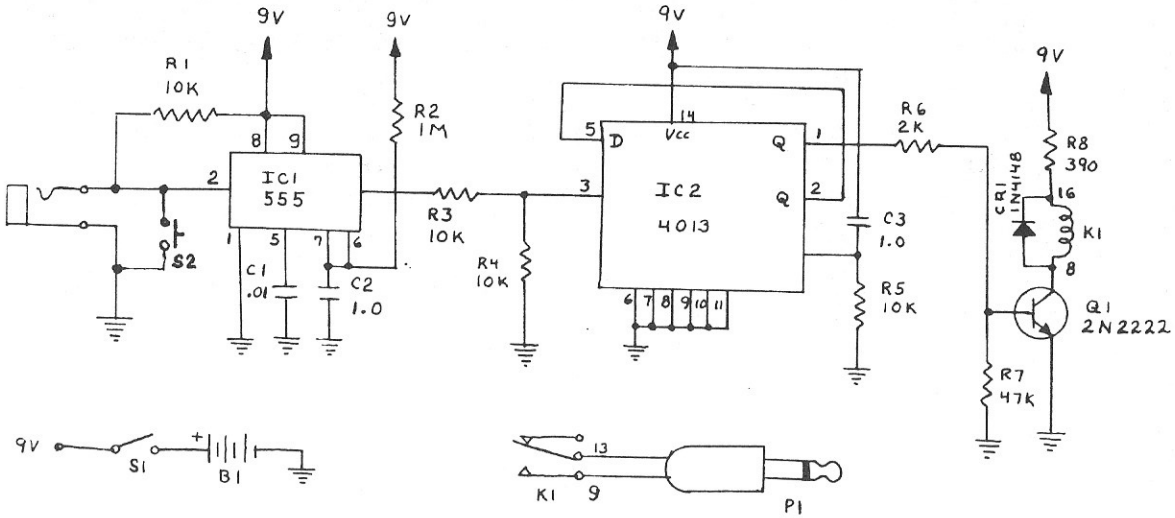

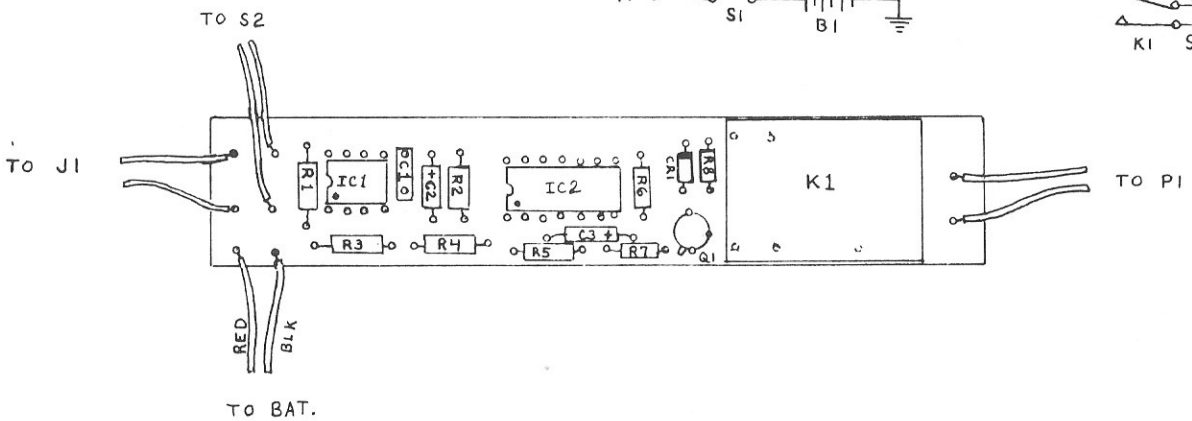

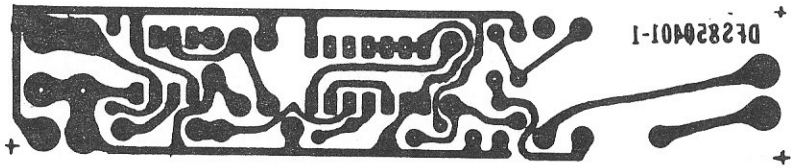

SCALE N/A	DWG NO DFS 850425-2
	TITLE SCHEMATIC, BI-STABLE SWITCHING CIRCUIT
	DESIGNER [illegible] DATE 4-30-85

PARTS LIST: DFS840724-1 | DESCR: PARTS LIST - "TOE WALKER RADIO | SH 1 OF 1

IT	PART NO	DESCR	REF	QT	U/M	COMMENTS
1	VARIOUS	9V. TRANSISTOR RADIO	—	1	E	
2		BATTERY SNAPS	J1	1	E	
3		BATTERY SNAPS	P1	1	E	
4		1KΩ, 1/4 w Resistor	R1	1	E	
5		100KΩ, 1/4w Resistor	R2	1	E	
6		47KΩ, 1/4w Resistor	R3	1	E	
7		47µf, 16v Radial Capacitor	C1	1	E	
8		47Ω, 1/4w Resistor	R4	1	E	
9	2N2907	Transistor	Q1	1	E	
10	2N2222A	Transistor	Q2	1	E	
11	DFS850724-1	Contact Assy	—	1	E	
12	DFS850723-2	Assy		1	E	
13	DFS850723-1	Schematic		REF.		

AMERICAN INSTITUTE OF INDUSTRIAL ENGINEERS AIIE FOUNDED 1948

REVISION:

DESIGNER: N A Sandler

DATE: 7-24-85

The way the circuit is packaged will vary greatly depending upon the available space within the radio. The assembly shown was tailored to a space between the battery and the speaker coil of the radio we chose. Dense packaging, as shown, resulted in a circuit about the size of a thimble.

Parts layout is not critical except that care must be taken with lead dress to prevent unwanted short circuits. If metal can type transistors are used, an insulator disk should be cut from masking tape and placed between the transistors to prevent the cans from touching each other. After testing, the circuit should be completely encapsulated with silicon rubber (bathtub caulk) for both strength and insulation. Clear fingernail polish could do the same job.

CAUTION: The length of wire from the radio to the shoe snaps represents a hazard from tangling and tripping. The wire should be sized to fit the specific individual involved, run inside the pants leg, and taped at the ankle if necessary.

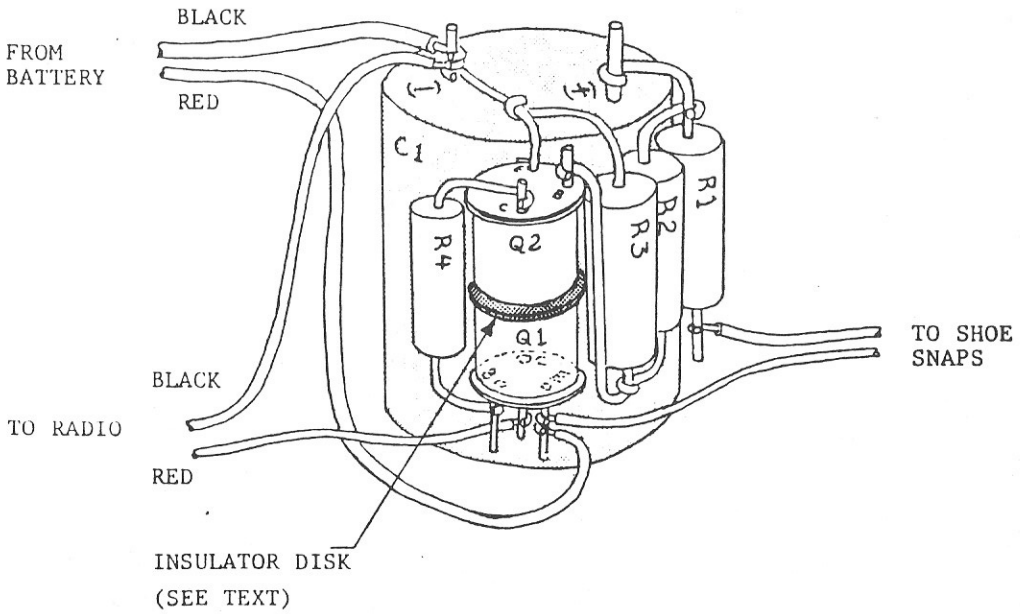

SCALE	DWG NO DFS 850723-2
	TITLE ASSEMBLY, "TOE WALKER" RADIO
	DESIGNER D. T. Scudder
	DATE 7-23-85

CONTACT ASSEMBLY

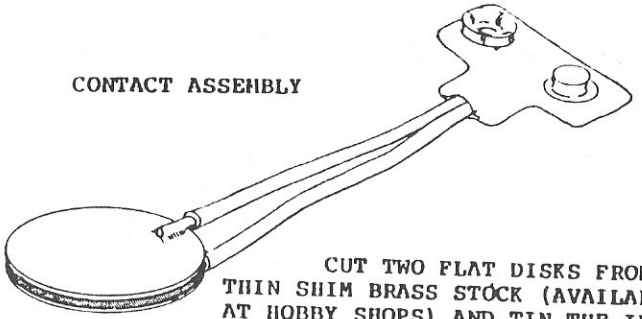

CUT TWO FLAT DISKS FROM THIN SHIM BRASS STOCK (AVAILABLE AT HOBBY SHOPS) AND TIN THE INNER SURFACES OF EACH WITH SOLDER. SEPARATE THEM WITH A THIN (.010" - .015") SHIM AND BOND THEM TOGETHER AT THE VERY EDGES VERY EDGES WITH SILICON RUBBER BATHTUB CAULK. ALLOW TO DRY FOR 24 HOURS AND REMOVE THE SPACER SHIM. SOLDER THE LEADS OF A BATTERY SNAP TO THE ASSEMBLY, ONE LEAD TO EACH BRASS DISK.

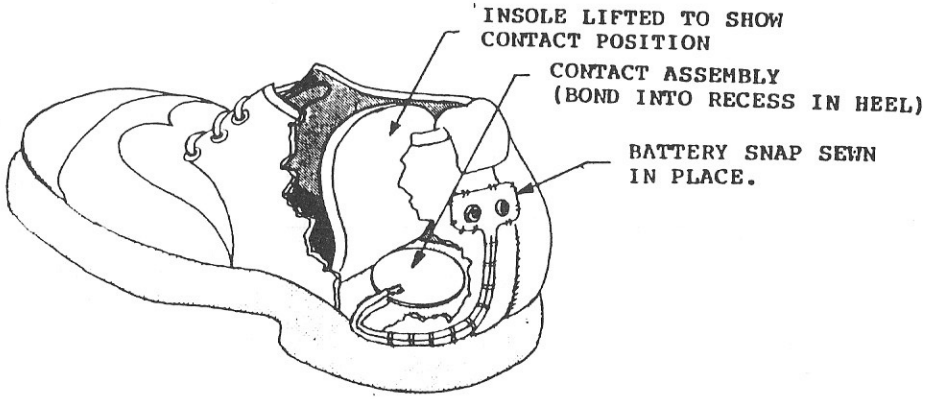

NOTE: SHOE IS SHOWN CUT AWAY FOR CLARITY. ONLY A SMALL SLIT NEAR THE SOLE IS REQUIRED FOR WIRE EXIT.

SCALE N/A	DWG NO DFS 850724-1
	TITLE "TO CONTACT ASSY- "TOE WALKER RADIO
	DESIGNER N. T. Scudder DATE 7-24 85

CIRCUIT DESCRIPTION

The circuit was designed to negatively reinforce "toe walking" by a three year old with Cerebral Palsey. An inexpensive transistor radio attached to the childs' belt plays only when a contact assembly, built into the heel of a sneaker, senses weight applied to the heel.

The battery snaps in the radio are cut off close to the snaps and discarded. The circuit is built as shown and installed in the radio. Connector set J1/P1 are battery snaps, with J1 run out through the side of the sneaker and sewn to it. P1 runs from the radio, down through the pants leg and snaps onto J1.

When weight is applied to the contact assembly, closing it, capacitor C1 charges rapidly, turns transistor Q2 on, which in turn causes Q1 to conduct and play the radio. The radio will remain on as long as weight is on the heel. When weight is removed, C1 slowly discharges through R2/R3, until Q2 turns off and shuts the radio down. This time delay, about 2 1/2 seconds, allows the removal of weight for short periods, such as in normal walking, running and reaching without nuisance interruptions of the radio.

The delay time may be shortened or lengthened by decreasing or increasing the value of R2, but R2 and R3 should remain in roughly a 2:1 ratio.

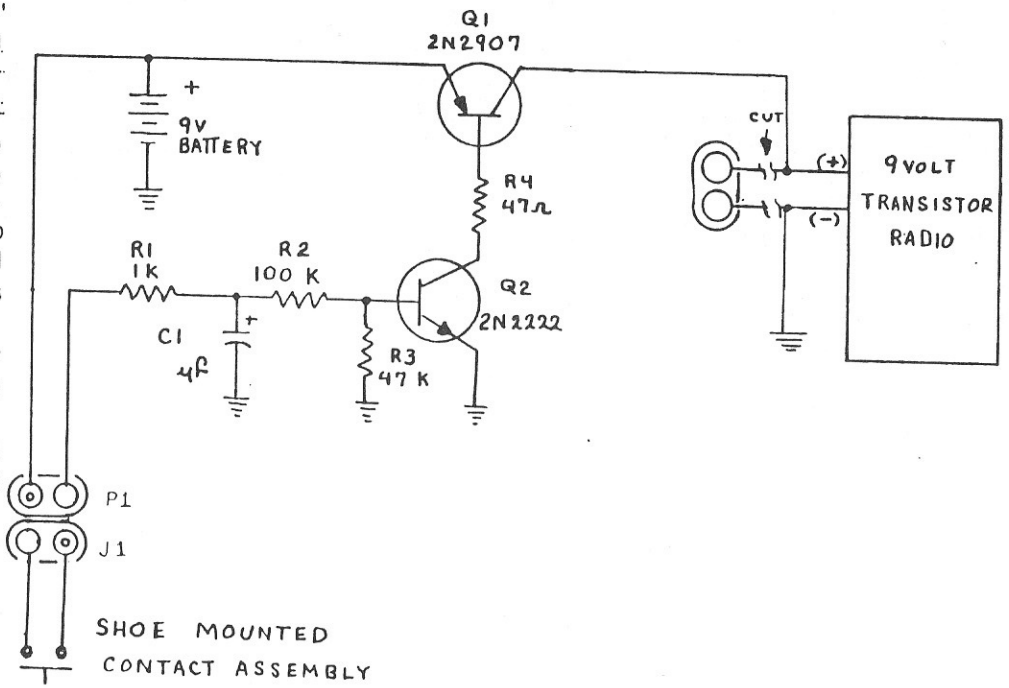

SCALE N/A	DWG NO DFS 850723-1
	TITLE SCHEMATIC, "TOE WALKER" RADIO
	DESIGNER
	DATE 7-23-85